Electric Vehicle Supply Equipment (EVSE)

WWW.EATON.COM/PLUGIN

EATON
Powering Business Worldwide

© 2008 Eaton Corporation. All rights reserved

EVSE Product Line Offering
-Electric Vehicle Charging Stations

120 VAC Universal Receptacle	120 VAC EVSE	240 VAC EVSE	240 VAC Commercial Series	DC Quick Charge Commercial Series
AC Level 1	AC Level 1	AC Level 2	AC Level 2	DC Level 2

EATON
Powering Business Worldwide

120 VAC EVSE
EV Charging Station Level 1

EATON
Powering Business Worldwide

Product Details

- **Features**
  - Input Voltage : 110/120VAC
  - Input Amperage: 16 or 30 Amps
  - Wall-mount style
  - Quick and easy installation
  - Rugged stainless steel construction
  - Indoor / outdoor rated
  - Auto-reset feature
  - Standard 16’ cord.
- **Options**
  - Customization available
  - Optional LED lighting available
  - Optional utility grade sub-metering
- **Standards**
  - SAE J1772™ compliant connector
  - ETL listed to UL® 2594/2231/1998

240 VAC EVSE
EV Charging Station Level 2

Product Details

- **Features**
  - Input Voltage : 208/240 VAC
  - Input Amperage: 16 or 30 Amps
  - Wall-mount style
  - Quick and easy installation
  - Rugged stainless steel construction
  - Indoor / outdoor rated
  - Auto-reset feature
  - Standard 16’ cord.
- **Options**
  - Customization available
  - Optional LED lighting available
  - Optional utility grade sub-metering
- **Standards**
  - SAE J1772™ compliant connector
  - ETL listed to UL® 2594/2231/1998

EATON
Powering Business Worldwide

240 VAC Commercial Series
EV Charging Station Level 2

Product Details

- **Features**
  - Input Voltage: 208/240 VAC
  - Input Amperage: 30- 70 Amps
  - Wall mount or pedestal design
  - Indoor / outdoor rated
  - Standard 18 foot cable
  - Ethernet
  - Memory slot
  - Modbus communication
  - Serial (RS-232)
- **Options**
  - Credit Card Processing
  - Keyfob Reader
  - Keypad Authentication
  - Pow-R-Station Network Manager
- **Standards**
  - ETL Listed to UL® 2594/2231/1998
  - SAE J1772™ compliant

EATON
Powering Business Worldwide

DC Quick Charger
EV Charging Station Level 2

Product Details

- Features
  - Input Voltage: 208/240 VAC
  - Input Amperage: 156 Amps
  - Output Power: 50kW output
  - 9 foot standard cable
  - Indoor/outdoor rated
  - Pad Design
  - CHAdeMO compliant connector
- Options
  - Credit Card Processing
  - Keyfob Reader
  - Pow-R-Station Network Manager
- Standards
  - ETL Listed to UL® 2594/2231/2202 pending
  - CHAdeMO connector

EATON
Powering Business Worldwide

Electric Vehicle Simulator

Ensures correct installation of EVSE

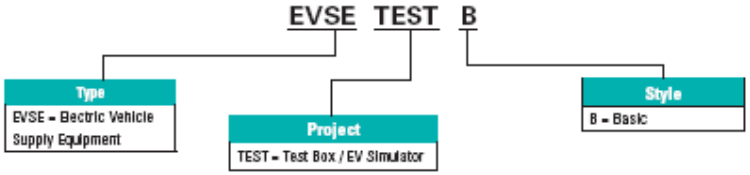

Product Details

- Confirm proper operation of any J1772™ compliant EVSE without the need of an actual Electric Vehicle
- Rugged case is perfect for service personnel
- Easy-to-follow testing instructions printed on unit
- Ready / Not Ready vehicle state switch
- Ground fault simulation
- Charging indicator
- Pilot signal test points for oscilloscopes

EATON
Powering Business Worldwide

Product Breadth and Configurations

EVSE Level 1 & Level 2

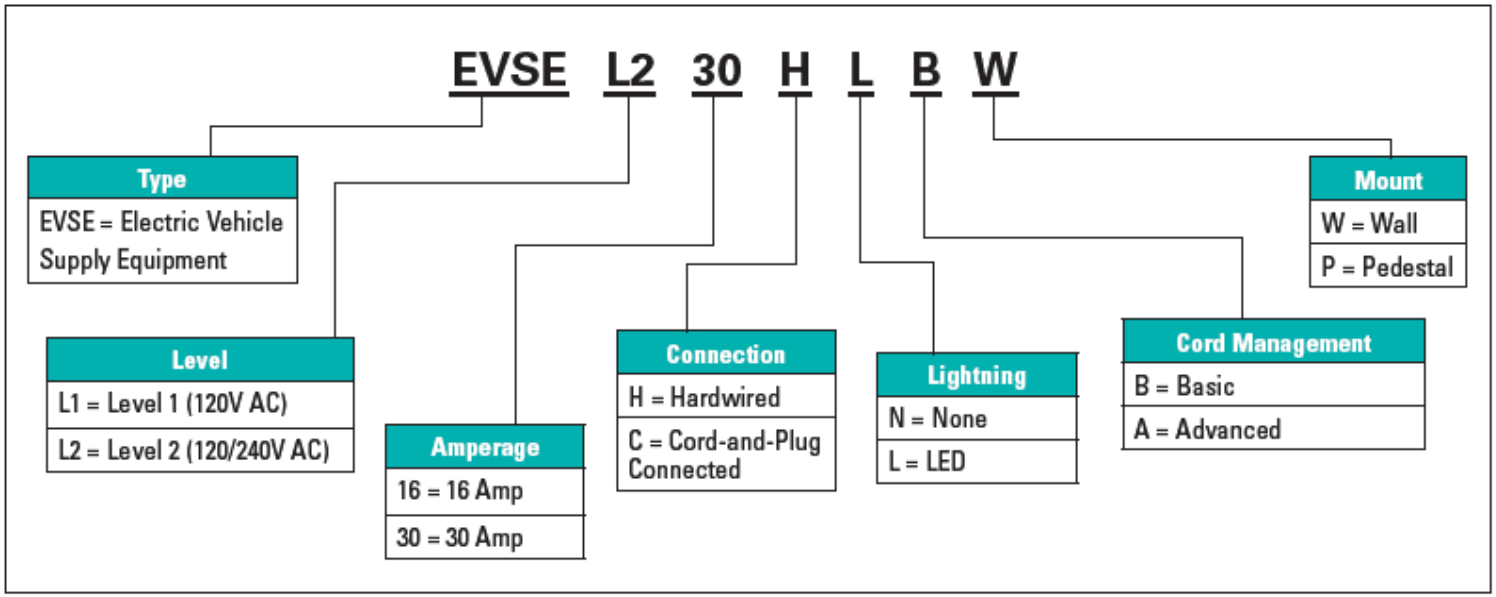

- Auto-reset feature
- Indoor / outdoor rated
- Rugged stainless steel construction
- SAE J1772TM compliant connector

EATON
Powering Business Worldwide

Eaton's new Dual Level 2 EVSE

Powering Business Worldwide

City of Seattle Seattle Muni Garage

Eaton’s Auburn plant

- Level 2 Pedestal mount

GSA Parking space- Seattle

Snohomish County Fairgrounds

Powering Business Worldwide

Taylor Shellfish- Shelton Wa

DC Quick Charge- WDOT Olympia

EATON

Powering Business Worldwide