Winter 2013

NOAA FISHERIES
WEST COAST REGION

NOAA Fisheries' Snohomish PUD/Admiralty Inlet Biological Opinion: Questions & Answers

What is the proposed project?

The Snohomish Public Utility District is seeking a 10-year pilot license from the Federal Energy Regulatory Commission (FERC) to install and operate two Open Hydro tidal turbines 6 meters in diameter. Each turbine would be mounted on a frame and set on the seafloor in Admiralty Inlet at a depth of about 55 meters. No pile driving or permanent anchors are required to install the turbines. The proposed project is the first of its kind in the United States employing this new tidal turbine technology. The purpose of the proposed pilot project is to evaluate the feasibility of tidal turbine technology, and to investigate and evaluate potential environmental effects and their impact on marine species and habitats using robust monitoring and mitigation plans during the 5-year deployment period. These plans will both provide valuable information on effects, and also provide mitigation for effects through adaptive management measures as we learn about project effects.

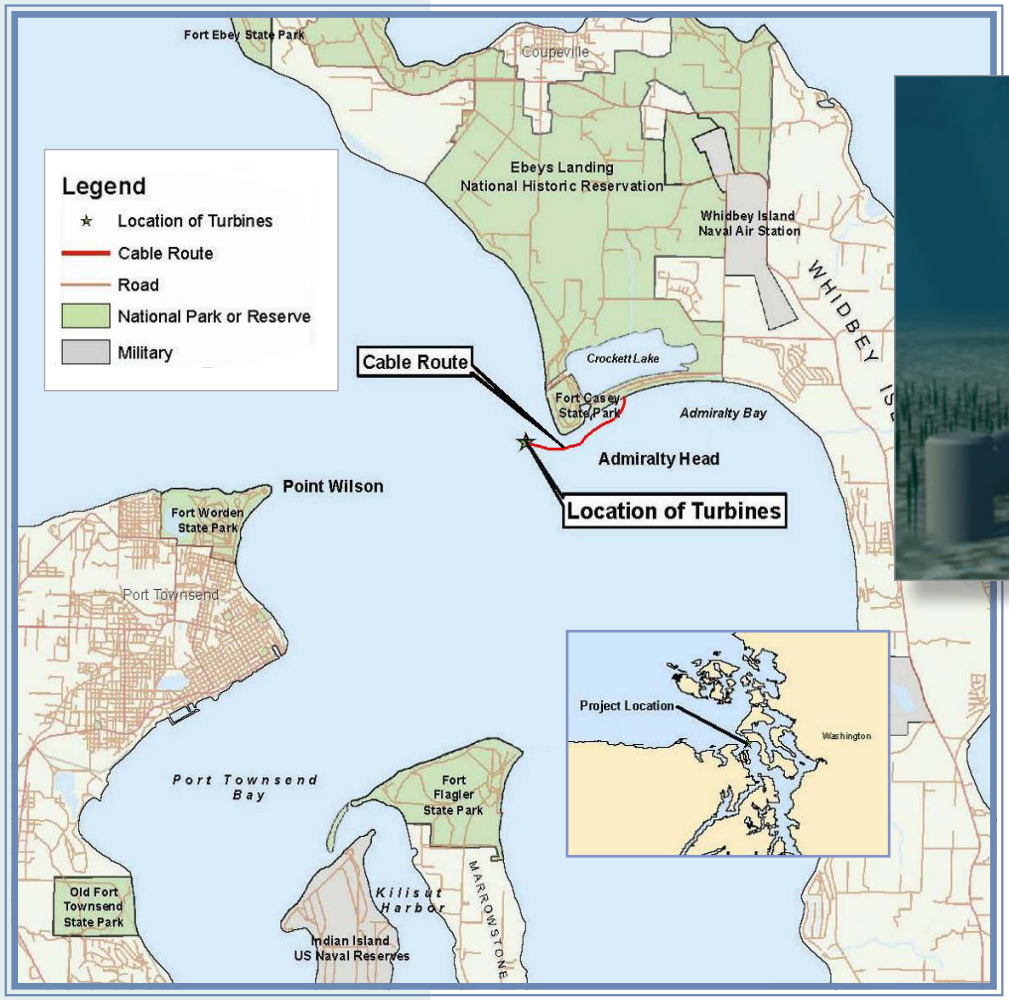

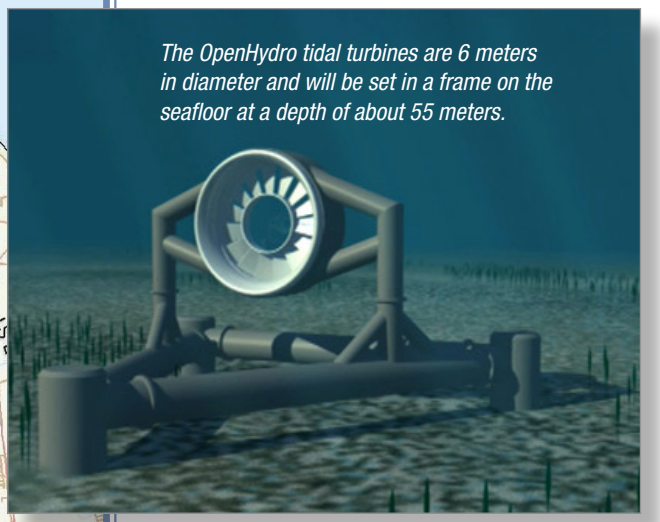

The OpenHydro tidal turbines are 6 meters in diameter and will be set in a frame on the seafloor at a depth of about 55 meters.

The license is for 10 years, will the turbines be in Admiralty Inlet that long?

No. The proposed FERC pilot license period is 10 years, but the turbines will be deployed for up to 5 years. The Snohomish Public Utility District needs lead time to finance, construct the turbines; and deploy the turbines and

Questions & Answers: NOAA Fisheries's Snohomish PUD/Admiralty Inlet Biological Opinion

Marine species listed as threatened or endangered under the Endangered Species Act that could be affected:

Puget Sound Chinook Salmon

Hood Canal Summer-run Chum Salmon

Puget Sound Steelhead

Puget Sound/Georgia Basin Yelloweye rockfish

Puget Sound/Georgia Basin canary rockfish

Puget Sound/Georgia Basin bocaccio

Southern Resident killer whale

Humpback whale

monitoring equipment, and has therefore requested a 10-year license term to accommodate these activities. The turbines can be removed within a short time-frame if necessary for safety reasons or if environmental effects indicate such an action is warranted.

What are the most significant effects from the project?

NOAA Fisheries identified the following effects that have the potential to adversely affect ESA-listed species and their habitats:

- Sound from turbine operations which will likely exceed NOAA Fisheries' harassment level (120 dB) for marine mammals up to 750 meters away from the turbines.
- Blade strike from the blades rotating in the tidal currents, although NOAA Fisheries determined that the risk is very small for whales, and fishes are likely to avoid or survive passage through the turbines.

Will there be studies to understand the effects of the turbines on marine life, and will there be a method to provide mitigation for those effects as we learn about them?

Yes. Construction and operation of the project would likely have effects on marine resources, and because this is new technology, there is little to no information on the effects. Therefore, the Public Utility District will be conducting an extensive monitoring program that includes mitigation measures to be implemented if needed. The information from the monitoring plan will allow all the interested parties to assess effects of the project and use this information for many purposes, including triggering specific mitigation actions to avoid or minimize negative effects. The monitoring and mitigation plans, developed by the Public Utility District, NOAA Fisheries, U.S. Fish and Wildlife Service, the State of Washington, Tribes, and other interested stakeholders, focus on answering key questions about the effects of these tidal turbines on the environment in Puget Sound.

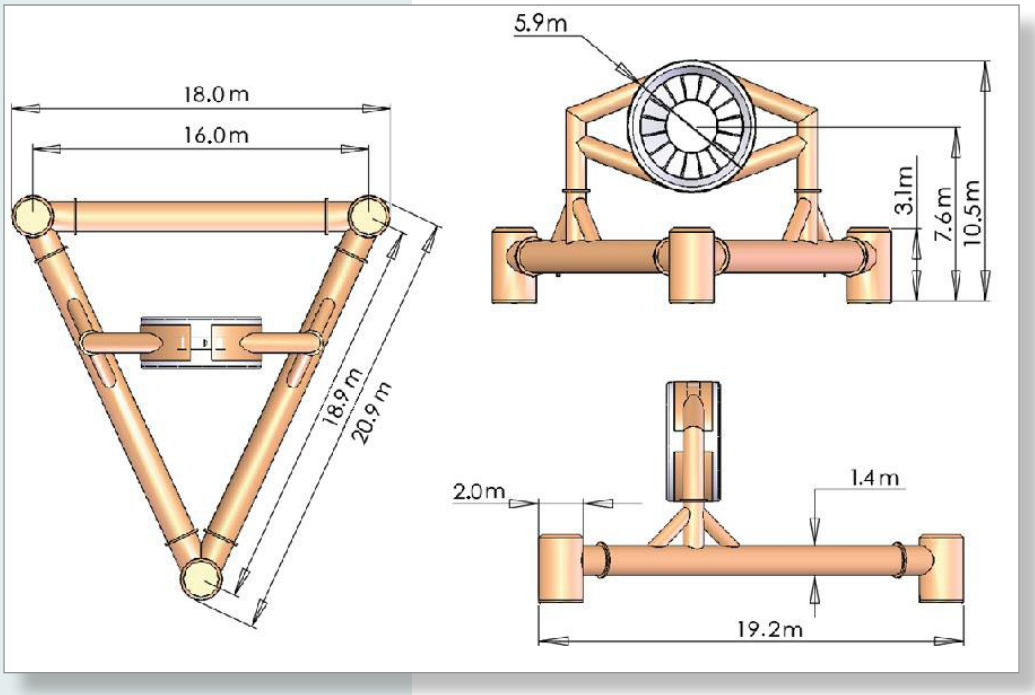

The plans assess both environmental stressors (i.e. sound, changes to current velocities) and the response of marine species and habitats (i.e. avoidance or attraction, blade strike). Additionally, the plans include specific mitigation triggers and actions which would be carried out by Snohomish Public Utility District to protect and conserve marine species and habitats. These mitigation actions include modifications to monitoring methods or objectives, changes or modification of the turbine structures, changes in turbine operations, temporary shut-down of the turbines, or removal of one or both turbines.

Questions & Answers: NOAA Fisheries's Snohomish PUD/Admiralty Inlet Biological Opinion

Potential risks to Southern resident killer whales

Southern Resident Killer Whales are likely to be present in the action area and would be exposed to sound and the risk of blade strike from the operation of the two tidal turbines. Sound from the project would not exceed NOAA Fisheries' established level for harm (broadband sound in excess of 180dB), but the sound could cause harassment through exposure to up to 120 dB of sound out to 750 meters from the turbines. The most likely response of the whales to this level of sound would be that they would avoid the area. This area is a small percentage (less than 15 percent) of the channel in Admiralty Inlet, and it would not pose a problem for this very small area to be inaccessible during the high flow times in the tidal cycles. Sound from the turbines would be cyclic, rising and falling in relation to the current velocities and corresponding turbine operating levels, as opposed to an impulse sound such as occurs from pile driving.

Southern Resident Killer Whales could also be exposed to the risk of blade strike from operating turbines. Pacific Northwest National Laboratory and Sandia National Laboratory modeled a "worst case scenario" specifically to identify the risk to killer whales from the proposed project. They concluded that if a killer whale came in contact with a spinning blade, the worst injury would be equivalent to a bruise.

In the San Juan Islands, killer whales rarely dive deeper than 90 feet, and it is unlikely that they would act differently in Admiralty Inlet. This means that it is unlikely that an individual killer whale would dive to 55 meters, the depth of the turbines. But if a whale did dive down to the turbines, it is unlikely that they would collide with the turbines, as they have highly developed echolocation capabilities and sound from the turbine would be audible. Even if an individual approached the turbines, and did not avoid them, most individuals would deflect off of the structure.

This biological opinion includes five robust monitoring and reporting plans to track potential impacts on protected species. Snohomish Public Utility District will implement the monitoring and mitigation activities, employing a number of methods (passive acoustics such as hydrophones, boat and shore observations off marine mammals, near-turbine cameras) to identify negative interactions and effects, such as a blade strike event. If behavior indicating a negative interaction is identified, Snohomish Public Utility District would take action to avoid or minimize the effect through mitigation including modifications to project operations, ceasing project operations, or removal of the turbines.

Questions & Answers: NOAA Fisheries's Snohomish PUD/Admiralty Inlet Biological Opinion

What are the specific monitoring and mitigations plans analyzed in the biological opinion?

Marine Mammal Monitoring & Mitigation Plan

The objective of the Marine Mammal Monitoring and Mitigation Plan is to improve the understanding of how marine mammals interact with operating tidal turbines, and mitigate for any adverse effects. The primary considerations are attraction, avoidance, or change in activity state as a consequence of exposure to noise or aggregations of prey in the vicinity of the turbine. Particular attention is given to the Southern Resident Killer Whales, and given their iconic status and their status as endangered under the Endangered Species Act, to ensure the protection of the species. If unanticipated or significant negative effects are identified through monitoring, then specific mitigation actions would be triggered to minimize adverse effects on marine mammals.

Acoustic Monitoring & Mitigation Plan

The Acoustic Monitoring and Mitigation Plan will characterize levels of sound produced by the operation of the turbines, establish the relation between power generation levels and sound produced, monitor for long-term shifts in the sound generated by the turbines; and to mitigate for adverse effects from sound. If noise from the turbines is in excess of the levels anticipated, specific mitigation actions would be triggered to minimize adverse effects on marine mammals.

Near-Turbine Monitoring & Mitigation Plan

The Near-Turbine Monitoring and Mitigation Plan would use a combination of stereo-optical and acoustical cameras mounted on the turbine foundations to observe interactions of marine fish, birds, and mammals near (within about 3-7 meters) the turbines. This monitoring would identify unanticipated adverse effects of the project on fish and marine mammal behavior, determine if potential harm from blade strike, among other things, is occurring, and identify the need for mitigation action, including potentially shutting down or removing the turbine.

Derelict Gear Monitoring & Mitigation Plan

The Derelict Gear Monitoring and Mitigation Plan would use periodic ROV surveys to inspect project features in addition to the near-turbine monitoring cameras mounted on the turbine foundation. The monitoring would identify any derelict fishing gear accumulating on turbines or their foundations. If gear were collecting on the project Snohomish PUD would remove the derelict gear to protect marine species.

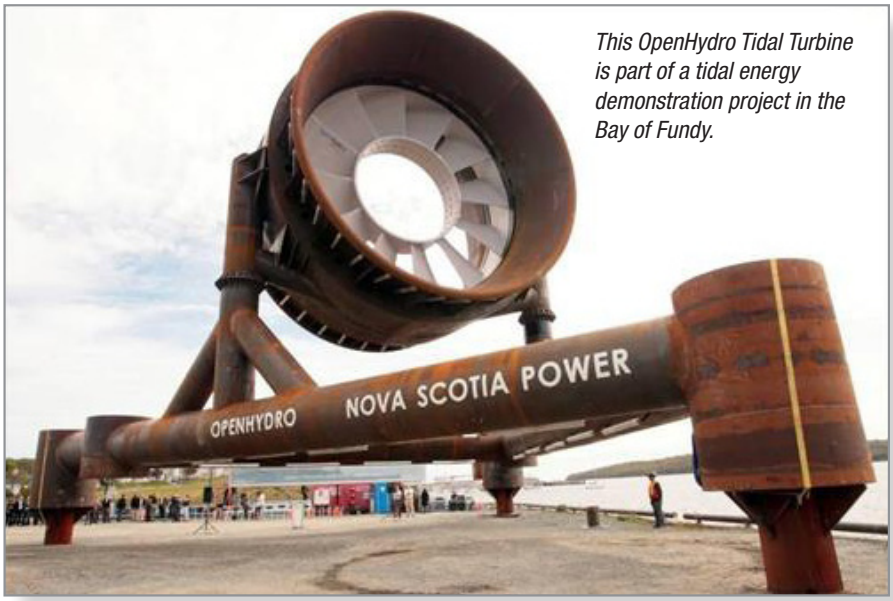

This OpenHydro Tidal Turbine is part of a tidal energy demonstration project in the Bay of Fundy.

Benthic Habitat Monitoring & Mitigation Plan

The objective of the Benthic Habitat Monitoring and Mitigation Plan is to monitor for changes to benthic ecology caused by the turbine foundation and installation/maintenance anchors (e.g., reef effects) or wake (e.g., accumulation of fine sediments), and mitigate for any adverse effects.