COVER PAGE
APRIL 2011

TITLE OF ENVIRONMENTAL REVIEW	Draft Environmental Assessment for 10(a)(1)(A), Enhancement of the Species Permit Application for the collection and transport of Spring-Run Chinook for the San Joaquin River Restoration Program
RESPONSIBLE AGENCY AND CONTACT	Elif Fehm-Sullivan National Marine Fisheries Service (NMFS) Protected Resources Division 650 Capitol Mall, Suite 500 Sacramento, CA (916) 930-3600
LOCATION OF PROPOSED ACTIVITIES	The Feather River Fish Hatchery, the San Joaquin Fish Hatchery and Interim Facility, the Silverado Fisheries Base and the Center for Aquatic Biology and Aquaculture
PROPOSED ACTION	Issuance of an Endangered Species Act section 10(a)(1)(A) permit to US Fish and Wildlife Service to collect Central Valley spring-run Chinook salmon eggs and juveniles from the Feather River Fish Hatchery to the San Joaquin Fish Hatchery and Salmon Conservation Facility as an initial step to further the process of re-establishing this species in the San Joaquin River below Friant Dam.

This page intentionally left blank.

TABLE OF CONTENTS

Section 1 Purpose and Need 1-1

1.0 Purpose and Need 1-1
1.1 Background 1-1
1.2 Purpose and Need Statement 1-2
1.3 Action Area 1-3
1.4 Scoping 1-3

Section 2 Alternatives 2-1

2.1 Alternatives to be Analyzed 2-1
2.2 Alternatives Considered and Eliminated from Further Consideration 2-2

Section 3 Affected Environment 3-1

3.1 Background 3-1
3.2 Hatchery Facilities: Feather River Fish Hatchery (FRFH), Silverado Fisheries Base, Center for Aquatic Biology and Aquaculture (CABA) and San Joaquin Fish Hatchery (SJFH) with Interim Facility 3-1
3.2.1 Feather River 3-1
3.2.2 Feather River Fish Hatchery (FRFH) 3-1
3.2.2.1 Holding and Spawning 3-1
3.2.2.2 Population Size 3-1
3.2.2.3 FRFH Water Source 3-3
3.2.2.4 FRFH Water Quality 3-4
3.3 Silverado Fisheries Base and the Center for Aquatic Biology and Aquaculture (CABA) 3-5
3.4 San Joaquin River 3-5
3.4.1. Introduction 3-5
3.4.2. San Joaquin Fish Hatchery (SJFH) and Salmon Conservation Facility 3-5
3.4.3 Water Quality 3-6
3.4.3.1 San Joaquin Fish Hatchery and Salmon Conservation Facility 3-6
3.4.3.2 San Joaquin River Reach 1 3-7
3.5. Fish 3-7
3.5.1 San Joaquin River Reach 1 3-7
3.6 Air Quality 3-8
3.6.1 Air Basins and Attainment Status 3-8
3.6.2 Odor 3-10
3.7 Climate Change and Greenhouse Gas Emissions 3-10
3.7.1 Global Climate Trends and Associated Impacts 3-11
3.7.2 California Climate Trends and Associated Impacts 3-11
3.7.3 Greenhouse Gas Emissions Sources and Inventory 3-12

Section 4 Environmental Consequences 4-1

4.1 Hatchery Facilities: FRFH, Silverado, CABA and SJFH with Salmon Conservation Facility 4-1
4.1.1 No Action Alternative 4-1
4.1.2 Proposed Action 4-1
4.2 Water Quality 4-1

4.2.1 No Action Alternative 4-1
4.2.2 Proposed Action 4-2
4.3 Fish 4-2
4.3.1 No Action Alternative 4-2
4.3.2 Proposed Action 4-2
4.3.2.1 Feather River Effects 4-2
4.3.2.2 San Joaquin River Effects 4-3
4.4 Air Quality 4-4
4.4.1 No Action Alternative 4-4
4.4.2 Proposed Action 4-4
4.5 Climate Change 4-4
4.5.1 No Action Alternative 4-4
4.5.2 Proposed Action 4-4

Section 5 Cumulative Impacts 5-1

Section 6 References 6-1

Section 7 List of Preparers 7/8-1

Section 8 Cooperating Agencies & Consulted Parties **7**/8-1

8.1 Cooperating Agencies 7/8-1
8.2 Consulted Parties 7/8-1

Figures .....

Figure 1-1 Action Area Locations 1-4
Figure 3-1 Feather River and Feather River Fish Hatchery Facilities 3-2
Figure 3-2 Number of spring-run Chinook adults spawned at the FRFH 3-3

Tables .....

Table 3-1. Surplus Fish Observed at Feather River Fish Hatchery in Recent Years 3-3
Table 3-2. Current range of suitable water temperatures required for fish production at FRFH. 3-4
Table 3-3. FRFH Discharge Effluent Limitations 3-4
Table 3-4 Native and non-native fish found in the San Joaquin River in Reach 1 3-7
Table 3-5 Summary of Attainment Status Designations for the Sacramento, San Joaquin and Bay Area Air Basins 3-9
Table 5-1 Qualitative Assessment of California Salmonids' Vulnerability to Climate Change 5-2

Appendices .....

Appendix 1 Incubator and holding pen types and methods that may be used in implementing the 10(a)(1)(A) permit

Appendix 2 §*10(a)(1)(A), Enhancement of the Species Permit Application for the collection and transport of Spring-Run Chinook for the San Joaquin River Restoration Program*

ACRONYMS

Alpha –BHC	alpha-benzene hexachloride
BMP	Best Management Practices
CABA	Center for Aquatic Biology and Aquaculture
CDFG	California Department of Fish and Game
CDWR	California Department of Water Resources
cfs	cubic feet per second
CO2	Carbon dioxide
CVP	Central Valley Project
CWA	Clean Water Act
ESA	Endangered Species Act
ESU	Evolutionarily Significant Unit
FRFH	Feather River Fish Hatchery
FMP	Fisheries Management Plan
FWUA	Friant Water Users Authority
GHG	greenhouse gas
HGMP	Hatchery and Genetics Management Plan
NMFS	National Marine Fisheries Service
NPDES	National Pollution Discharge Elimination System
NRDC	Natural Resources Defense Council
PEIS/EIR	Program Environmental Impact Statement/Environmental Impact Report
RM	river mile

RWQCB	Regional Water quality Control Board
SJFH	San Joaquin Fish Hatchery
SJRRP	San Joaquin River Restoration Program
SJVAB	San Joaquin Valley Air Basin
spring-run Chinook	Central Valley spring-run Chinook salmon
SVAB	Sacramento Valley Air Basin
SWP	State Water Project
USFWS	United States Fish and Wildlife Service
VAMP	Vernalis Adaptive Management Program

SECTION 1 PURPOSE AND NEED

1.0 Purpose and Need

1.1 Background

The Central Valley spring-run Chinook salmon *(Oncorhynchus tshawytscha)* (spring-run Chinook) Evolutionarily Significant Unit (ESU) is listed as threatened under the Federal Endangered Species Act (ESA). The ESU includes all naturally spawned populations of spring-run Chinook in the Sacramento River and its tributaries in California, including the Feather River, as well as the Feather River Hatchery spring-run Chinook program (June 28,2005, 70 FR 37160). Critical habitat was established on September 2, 2005, and became effective on January 2, 2006 (September 2, 2005, 70 FR 52488).

Over the past two centuries, development of water resources transformed the San Joaquin River. Since the 1880s, large areas of valley floor were converted to agricultural production whose supporting irrigation activities modified the natural flow patterns. With the construction of Friant Dam on the San Joaquin River and the completion of the Friant-Kern Canal and Madera Canal the Friant Dam diverted San Joaquin River water supplies to over 1 million acres of highly productive farmland along the eastern portion of the San Joaquin Valley. Operation of the dam ceased flow for a portion of the approximately 153 miles of the river and extirpated salmon runs in the San Joaquin River upstream from its confluence with the Merced River.

In 1988, a coalition of environmental and fishing groups, led by the Natural Resources Defense Council (NRDC), filed a lawsuit, known as *NRDC, et al., v. Kirk Rodgers, et al.*, challenging renewal of long-term water service contracts between the United States and Central Valley Project Friant Division contractors. After more than 18 years of litigation of this lawsuit, a stipulation of settlement (Settlement) was reached. On September 13, 2006, the Settling Parties, including NRDC, Friant Water Users Authority (FWUA), and the U.S. Departments of the Interior and Commerce, agreed on the terms and conditions of the Settlement, which was subsequently approved by the District Court for the Eastern District of California on October 23, 2006. Implementation of the Settlement is accomplished through the San Joaquin River Restoration Program (SJRRP).

The Implementing Agencies of the SJRRP are the Bureau of Reclamation (Reclamation) and the United States Fish and Wildlife Service (USFWS) from the Department of Interior, the National Marine Fisheries Service (NMFS) from the Department of Commerce and, by Memorandum of Understanding, from the State of California, the Department of Fish and Game (CDFG) and the Department of Water Resources (CDWR).

The Settlement establishes two primary goals:

Restoration Goal – To restore and maintain fish populations in “good condition” in the mainstem San Joaquin River below Friant Dam to the confluence of the Merced River, including naturally reproducing and self-sustaining populations of salmon and other fish.

Water Management Goal – To reduce or avoid adverse water supply impacts on all of the Friant Division long-term contractors that may result from the Interim flows and Restoration Flows provided for in the Settlement.

Paragraph 14 of the Settlement states that the Restoration Goal "shall include the reintroduction of spring-run and fall-run Chinook salmon to the San Joaquin River between Friant Dam and the confluence of the Merced River". To accomplish this, Paragraph 14 of the Settlement also requires the USFWS to submit an ESA section 10(a)(1)(A) permit application to the NMFS for the reintroduction of spring-run Chinook.

Section 10 of the ESA allows for the issuance of permits for direct take (10(a)(1)(A)) and "incidental take (10(a)(1)(B))." Under section 10(a)(1)(A) The Secretary may permit, under such terms and conditions as he shall prescribe- any act otherwise prohibited by section 9 for scientific purposes or to enhance the propagation or survival of the affected species, including, but not limited to, acts necessary for the establishment and maintenance of experimental populations.

The Federal Implementing Agencies are authorized to carry out the Settlement by the San Joaquin River Restoration Settlement Act (Settlement Act) (Pub. L. 111-11, 123 Stat. 1349 (2009)). This legislation also mandates that spring-run Chinook reintroduced into the San Joaquin River under the SJRRP shall be as an experimental population pursuant to section10(j) of the ESA of 1973 (16 U.S.C. 1539(j)).

The issuance of the 10(a)(1)(A) permit would also further the goals of the Draft "Central Valley Recovery Plan for the Evolutionarily significant units of Sacramento River Winter-run Chinook Salmon and Central Valley Spring-run Chinook Salmon, and the Distinct Population Segment of California Central Valley Steelhead" (Draft Recovery Plan) (NMFS 2009a) which has the overarching aim of recovering listed salmonids in the Central Valley. More specifically, the Draft Recovery Plan stresses actions that improve the viability of these species, including the spring-run Chinook ESU, such that they can be removed from Federal protection under the ESA.

Prior to implementation of the restoration program for the San Joaquin River, an analysis of the potential environmental effects was prepared in accordance with the National Environmental Policy Act and the California Environmental Quality Act. A Program Environmental Impact Statement /Environmental Impact Report (Draft PEIS/EIR (Reclamation, 2010)) was prepared that evaluated the potential direct, indirect, and cumulative impacts on the environment at a program level that could result from implementing the Settlement consistent with the Settlement Act. As a Programmatic document the Draft PEIS/EIR discusses the reintroduction of spring-run Chinook to the San Joaquin River and the affected environment. Information from the Draft PEIS/EIR was used in the preparation of this Environmental Assessment (EA) for the discussions of air quality, climate change and the fish populations that currently exist in the San Joaquin River as there could be effected by the proposed action.

1.2 Purpose and Need Statement

The proposed action is to issue a permit under section 10(a)(1)(A) of the ESA to USFWS, for a period of five years, to collect surplus spring-run Chinook eggs or juveniles from the Feather River Fish Hatchery (FRFH) in order to establish broodstock methodologies and, to allow collection of surplus eggs and/or

juveniles from the FRFH to initiate releases of spring-run Chinook to the San Joaquin River. Propagation of broodstock methodologies would include the use of off-stream holding and rearing facilities in a salmon conservation hatchery facility. In addition, eggs and juveniles not intended for broodstock may be placed in incubator or holding pens that would be placed in or adjacent to the river. The proposed action does not include activities that would release spring-run Chinook into the San Joaquin River. This EA will analyze the potential impacts of the proposed action up to the point of releasing fish into the San Joaquin River. As noted above, the Settlement Act specifies that any spring-run Chinook released into the San Joaquin River shall be as an experimental population established under ESA section 10(j) experimental population designation (10(j) rule). Until such time as the 10(j) rule is in place, no fish collected under this permit or placed in any pens may be released to the San Joaquin River. The 10(j) rule will require its own NEPA analysis, including an analysis of the potential impacts on the human environment of reintroducing spring-run Chinook into the San Joaquin River.

The purpose of this action is to contribute to fulfilling some requirements of the Settlement by allowing an initial step to re-establishing spring-run Chinook in the San Joaquin River and to further the enhancement of the species and its potential for recovery. It is necessary to issue this permit to allow collection of spring-run Chinook because they are listed as a threatened species under the ESA.

1.3 Action Area

The Action Area of the proposed action is the Sacramento River and San Joaquin River Basins of California. More specifically, the Feather River Fish Hatchery (FRFH) in the Feather River sub-basin of the Sacramento River and the San Joaquin Fish Hatchery (SJFH) located on the San Joaquin River below Friant Dam. In-river or next-to-river incubator or holding pens may be placed in locations in or along the San Joaquin River from Friant Dam south approximately seven miles (river mile 267.5 (RM) to RM 260.6) to the Willow Unit of the San Joaquin Ecological Reserve (Willow Unit). Holding sites could be on/adjacent to state or federal agency lands or any other site for which a landowner has expressly consented to access. Proposed action activities may also occur at the Silverado Fisheries Base (Silverado) near Yountville, California or the Center for Aquatic Biology and Aquaculture (CABA) in Davis, California See Figure 1-1 for a map of the Action Area.

1.4 Scoping

On September 29, 2010, the USFWS submitted a §*10(a)1(A), Enhancement of the Species Permit Application for the collection and transport of Spring-Run Chinook for the San Joaquin River Restoration Program* to NMFS. As part of the scoping process the following events occurred:

- November 15, 2010, NMFS sent 10 NEPA notification letters to federally recognized tribes in accordance with Executive Order 13175, Consultation and Coordination with Indian Tribal Governments, to inform then that NMFS had begun planning for the preparation of an environmental assessment and public scoping process regarding the permitting and rule-making for reintroduction of spring-run Chinook to the San Joaquin River and to request comment.
- November 15, 2010, NMFS sent 74 letters to non-federally recognized tribes requesting them to comment and/ or participate in the public scoping process as interested parties.

- November 17, 2010, NMFS sent the USFWS a 30-day Response letter requesting additional clarification on the application.
- January 20, 2011, the Service sent NMFS a letter to clarify the Donor Stock Collection decision process and the finalized Hatchery and Genetic Management Plan (HGMP).

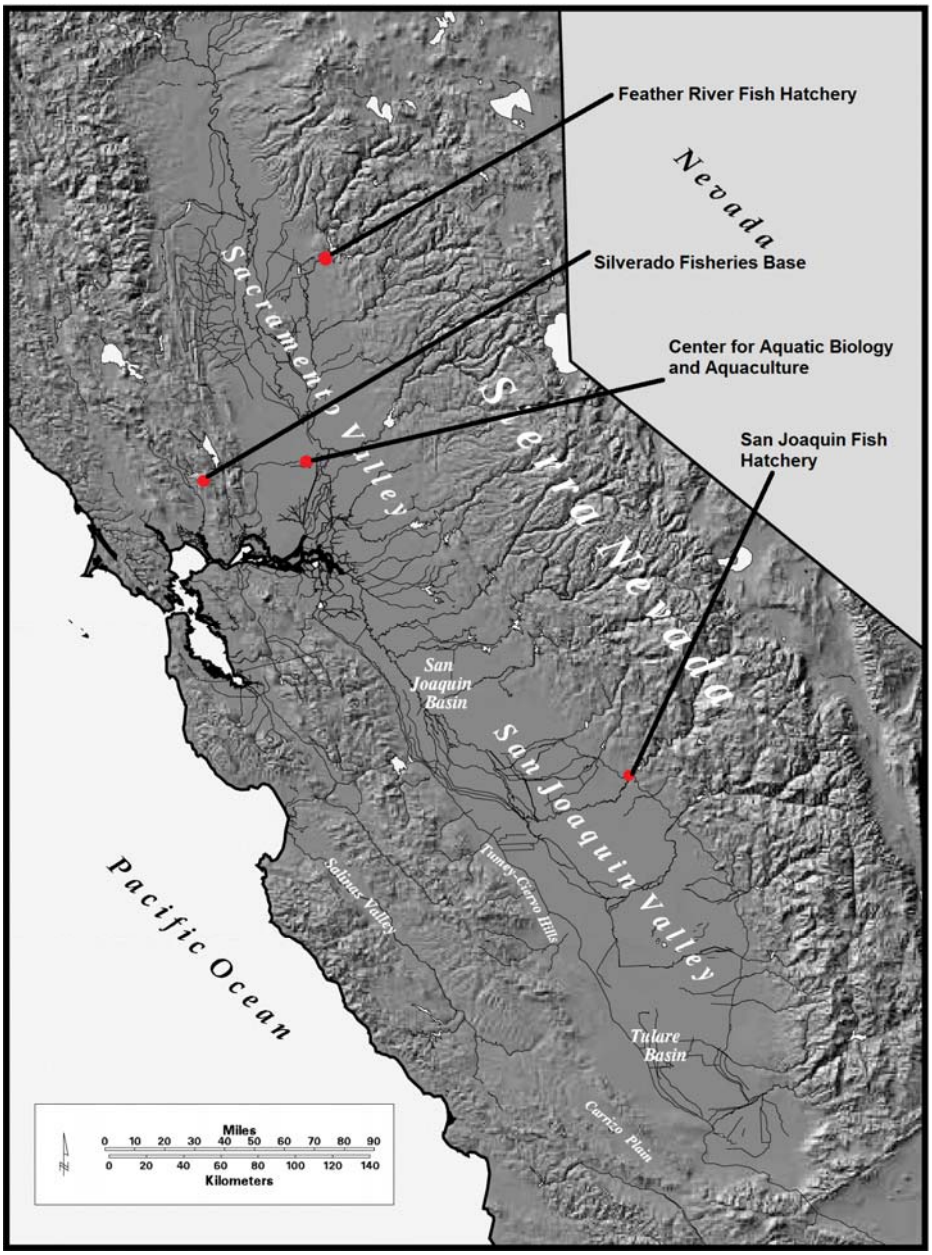

Note: Location displayed for San Joaquin Fish Hatchery includes area of San Joaquin River from hatchery to the Willow Unit.

Figure 1-1 Action Area Locations

- February 2011, NMFS released the section 10(a)(1)(A) permit application for public comment from February 4 through March 7, 2001 and held public workshops in Chico on February 3,

Fresno on February 7, and Los Banos, on February 8, for the sesction10(a)(1)(A) permit application and the experimental population process.

- April 7, 2011, NMFS met with the Southern Sierra Miwuk Tribe to discuss the spring-run Chinook reintroduction process.
- May 26, 2011, NMFS sends a letter to the Service providing them with the 113 public comments and the 4 NMFS comments that resulted from the public comment period for the 10(a)(1)(A) permit application.
- November 4, 2011, the USFWS submits the Revised §10(a)1(A), *Enhancement of the Species Permit Application for the collection and transport of Spring-Run Chinook for the San Joaquin River Restoration Program* to NMFS.
- December 2011, the USFWS revised the November 4, 2011, §10(a)1(A), *Enhancement of the Species Permit Application for the collection and transport of Spring-Run Chinook for the San Joaquin River Restoration Program* to NMFS to reflect changes in collection methods and donor sources.

Letters were sent to 84 federally and non-federally recognized tribes and a presentation made to the Southern Sierra Miwuk Tribe. Beyond one response made in support of the plan to restore salmon, no specific tribal interests were expressed regarding reintroduction. There are no tribal treaty or fishing rights affected by the proposed action. As a result, no further discussion of tribal interests will be part of this document.

This page intentionally left blank.

SECTION 2 Alternatives

2.1 Alternatives to be Analyzed

Two alternatives are considered in this EA: (1) to not issue the permit (no action), and (2) to issue the permit with conditions (proposed action/preferred alternative).

Alternative 1: Do Not Issue the Permit (No Action Alternative): Under a No Action alternative, NMFS would not issue the ESA section 10(a)(1)(A) permit to USFWS authorizing take of ESA-listed species associated with the requested activities. For the purpose of this analysis, this alternative would not allow the activities necessary for successful reintroduction of spring-run Chinook to the San Joaquin River, in the manner called for in the Settlement. Under the No Action Alternative, the re-establishment of spring-run Chinook populations within the Southern Sierra Nevada Diversity Group as identified in the Draft Recovery Plan, would require volitional recolonization from existing populations of spring-run Chinook. While occasional individuals would potentially stray into the San Joaquin River when river conditions may be suitable, it is unlikely that sufficient numbers would concurrently stray in order to establish a viable population by the year 2025 as required by the Settlement.

Alternative 2: Issue the Permit with Conditions (Proposed Action/Preferred Alternative): The proposed action is to issue a permit under section 10(a)(1)(A) of the ESA to USFWS, for a period of five years to collect eggs or juveniles, annually, from the FRFH. Individuals collected will be surplus spring-run Chinook eggs or juveniles from the FRFH.

The 10(a)(1)(A) permit applicant is proposing in the first three years of the permit up to 560 eggs will be collected, annually – and 2,760 egg in years four and five, from the FRFH, to establish broodstock in a CDFG salmon conservation hatchery facility (Conservation Facility) following the Hatchery and Genetics Management Plan (HGMP) incorporated into this 10(a)(1)(A) permit. The collected eggs will be trucked, using best management practices (BMP), from the FRFH located in Oroville, CA, first to a quarantine facility at either Silverado or the CABA. After the appropriate quarantine time the eggs would then be trucked to the Conservation Facility located on the grounds of the existing SJFH. At present a smaller interim salmon hatchery facility (Interim Facility) exists on the site where CDFG plans to build the Conservation Facility. This would be used for broodstock activities until the larger Conservation Facility construction is completed. The number of eggs collected annually will be constrained by the available facilities at the time. Broodstock activities would include holding, handling, and rearing of fish in the Conservation Facility and for non broodstock the placement of incubator and holding pens either in-river or next-to-river for development of techniques for imprinting and for acclimation. Net pen frames may be constructed of various appropriate materials, such as PVC and aluminum. See Appendix 1 for descriptions of incubator and holding pen types and methods that may be used. Sites would be selected to provide appropriate water depth, velocity, substrate, and cover characteristics to support juvenile growth and survival.

If an ESA section 10(j) experimental population rule is established, the permit requests that up to 80,000 eggs or up to 54,400 juveniles will be collected, annually, from the FRFH for release directly to the San Joaquin River once being cleared through quarantine. Juveniles and/or eggs for direct release will be

trucked to the quarantine facility, then to the San Joaquin River using BMPs. The eggs and/or juveniles will be held in various holding pens or incubators for imprinting, and then released directly into the San Joaquin River. As discussed in Section 1, this EA will not analyze the potential impacts of release to the San Joaquin River because at this time any release is not allowed and would be subject to a separate NEPA analysis.

The permit application and HGMP are included in Appendix 2 of this document. The following conditions would be included in the permit:

- In keeping with the requirements of the Settlement Act, no spring-run Chinook will be released to the San Joaquin River unless designated as an experimental population under section 10(j) of the ESA
- Establishing a numeric limit to the number of eggs or fry that could be collected from the Feather River Fish Hatchery annually (as shown in Table 2 (Section 5.5) of the application)
- Eggs or fry collected are demonstrably second generation spring-run phenotype (as described on page 11 (Section 5.2.1) of the application)
- Setting limits on the number or proportions of spring-run Chinook that could be incidentally taken as a result of carrying out the program, as shown in Appendix B, Table 2 of the application
- Setting operating guidelines for all hatchery facilities based on widely accepted best management practices. These would include, but are not limited to: maintenance of water quality discharges to those set forth in any hatchery discharge permit, and, any equipment associated with the holding pens will be properly maintained, cleaned and/or decontaminated prior to use in the San Joaquin River
- Requiring monitoring of the activities that occur in the hatchery facilities
- Requiring monitoring of net pens and associated activities that happen in the natural environment to ensure unforeseen adverse impacts are not occurring
- Requiring regular reports on the activities authorized by the permit

NMFS conditions would ensure that no spring-run Chinook are released to the San Joaquin River under the SJRRP, until an experimental population can be designated pursuant to section 10(j) of the ESA. NMFS conditions also would ensure that the annual take of ESA-listed anadromous fish would be for the propagation and enhancement of the ESA-listed spring-run Chinook population and the associated monitoring activities. The conditions imposed by NMFS would also help to ensure that the annual take would not appreciably reduce the likelihood of the survival and recovery of the species in the wild. Pursuant to ESA section 10, the permit would contain terms and conditions necessary to the propagation or survival of listed spring-run Chinook, including reporting requirements for determining whether such terms and conditions are being complied with.

2.2 Alternatives Considered and Eliminated from Further Consideration

Issue a Permit Without Conditions: NMFS considered issuing a permit without terms and conditions. However, that would not meet the statutory expectations of the Settlement Act or ESA section 10. Therefore, the action of issuing an ESA permit without terms and conditions was not analyzed.

SECTION 3 AFFECTED ENVIRONMENT

3.1 Background

The alternatives identified in Section 2 can potentially affect the physical and biological resources within the action area. The following is a summary of the major components of the environment that would be affected by any of the alternatives and the current baseline condition organized by the type of environment.

3.2 Hatchery Facilities: Feather River Fish Hatchery (FRFH), Silverado Fisheries Base and the Center for Aquatic Biology and Aquaculture (CABA), and San Joaquin Fish Hatchery with Interim Facility

3.2.1 Feather River

The Feather River is a major tributary to the Sacramento River located at the north end of the western slope Sierra Nevada, with a watershed encompassing 5,900 square miles (FERC 2007, NMFS 2009b). Figure 3-1 shows the location of the FRFH and general features of the Feather River.

3.2.2 Feather River Fish Hatchery

3.2.2.1 Holding and Spawning

Upstream migration of Chinook salmon (Chinook) is blocked by Fish Barrier Dam located one kilometer below the Oroville Dam. Adult spring-run Chinook are found holding at the Thermalito Afterbay Outlet and the Fish Barrier Dam as early as April (FERC 2007, NMFS 2009b) and begin spawning in September, usually 2-3 weeks earlier than the fall-run Chinook salmon (fall-run Chinook) (Jason Kindopp cited in (SJRRP, Stock Selection Strategy. 2010). Spring-run Chinook are spawned artificially in the FRFH and also spawn naturally in the river during late September to late October (Reynolds et al 1993, Yoshiyama 2001) downstream from the Fish Barrier Dam approximately (NMFS 2009a). Fall-run Chinook and steelhead are also produced by the FRFH

3.2.2.2 Population Size

In most years the FRFH has met its production goal of two million spring-run Chinook smolts (Anna Kastner cited in the 10(a)(1)(A) permit). To reach this target, the hatchery typically mates approximately 750 pairs to produce three million eggs (Figure 3-2). Once the production goal has been met, spring-run Chinook typically continue to enter the hatchery. In past years, these “surplus” fish have either been released back to the river, euthanized (designated as “killed, not spawned”); or allowed to die on site

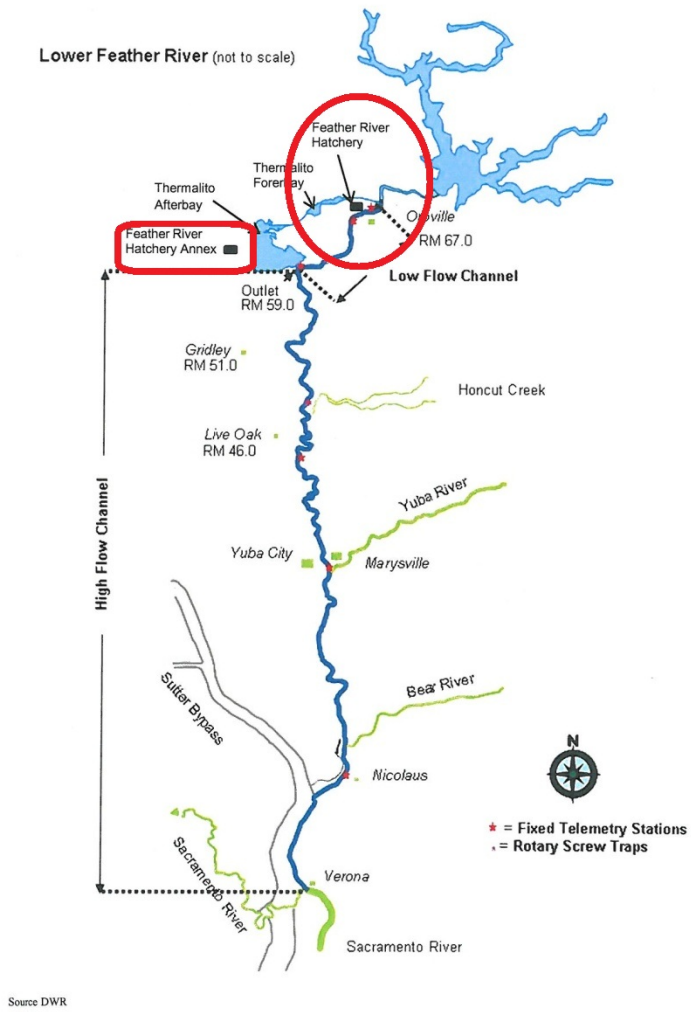

Figure 3-1 Feather River and Feather River Fish Hatchery Facilities (Circled)

(designated as "Died in Tank"). The "Died in Tank" adults died while waiting to be spawned, or were allowed to die over time once production goals were met.

The number of the "surplus" fish varies from year to year. During the current 2011 spawning season at FRFH the number of surplus adults was particularly large. Provisional counts, indicated that 486 surplus adults (231 males and 255 females) have entered the hatchery (Table 3-1). Theoretically, these fish were capable of producing an additional one million eggs.

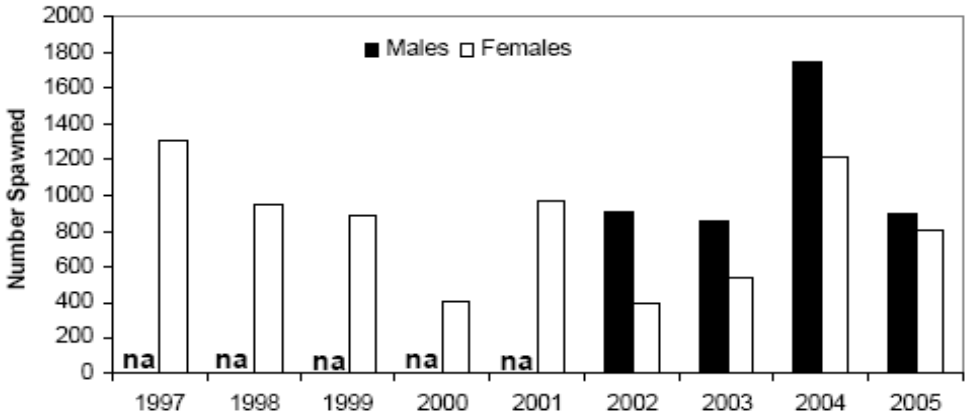

Figure 3-2. Number of spring-run Chinook adults spawned at the FRFH (Source: CDWR 2009).

	Female	Male	Jack	Died in Tank
2011	255	231	No data	No data
2010	154	23	6	256
2009	0	2	34	76
2008	47, unknown gender		No data	240

Table 3-1. Surplus Fish Observed at Feather River Fish Hatchery in Recent Years (Anna Kastner, cited in 10(a)(1)(A) permit).

Between 1967 and 2008, the highest annual hatchery spring-run Chinook escapement was 8,662, occurring in 2003 (CDFG 2009). Between 1986 and 2007, the average number of spring-run Chinook returning to the FRFH was 3,992, compared to an average of 12,888 spring-run Chinook returning to the entire Sacramento River Basin (NMFS 2009), and an average of 1,700 fish before the construction of Oroville Dam (Reynolds et.al. 1993, Yoshiyama 2001). More recently, FRFH spring-run Chinook escapement from 2005 through 2008 was 1,774, 2,061, 2,674, and 1,418, respectively (CDFG 2009) (NMFS 2009). The increase in numbers since the completion of the dam is attributed to the consistent supply of cold water to both the hatchery and the LFC and the contribution of hatchery fish (Reynolds et. al. 1993, Yoshiyama 2001).

3.2.2.3 FRFH Water Source

FRFH receives raw water from the Feather River at the Thermalito Diversion Dam and distributes it to the hatchery buildings and fish rearing areas. Overall raw water intake approximates 110 cfs. This water use is permitted as a non-consumptive use under water right issued by the California State Water Resources Control Board to the State Water Project (SWP) Oroville facilities. The Thermalito Annex, near the Thermalito Afterbay, uses about 12 cfs of well water that have percolated through Thermalito Afterbay soils.

3.2.2.4 FRFH Water Quality

The FRFH has requested that CDWR supply daily mean water temperatures during specific time periods (Table 3-2). However, temperatures provided to FRFH are expected to change with implementation of the FERC licensing requirements for the Oroville Facilities.

Table 3-2. Current range of suitable water temperatures required for fish production at FRFH.

Time Period	Daily Mean (Range ±4°F)
September	52 (48-56)
October - November	51 (47-55)
December – March	55 (51-59)
April – May 15	51 (47-55)
May 16 – May 31	55 (51-59)
June 1 – June 15	56 (52-60)
June 16 – August 15	60 (56-64)
August 16 – August 31	60 (54-62)

Studies indicate that average quality of the water entering the FRFH has been quite good, with no constituents that are likely to adversely impact cold water fish culture or human health (CDWR 2004d).

The discharge of FRFH effluent is by percolation back to the Feather River from a large settling pond. Currently, much of this water re-enters the Feather River through a river side channel adjacent to FRFH called “Hatchery Ditch”. Quality of the discharge water is regulated by National Pollution Discharge Elimination System (NPDES) permit number CA0004570 issued by the California Regional Water Quality Control Board. The permit regulates the discharge of constituents identified in Table 3-3. Discharged water has consistently met these requirements.

Table 3-3. FRFH Discharge Effluent Limitations

Effluent Limitations					
Parameter	**Units**	**Average Monthly**	**Maximum Daily**	**Instantaneous Minimum**	**Instantaneous Maximum**
Flow[1]	mgd	--	47.3	--	--
pH	standard units	--	--	6.0	9.0
Total Suspended Solids[2]	mg/L	5	15	--	--
	lbs/day[3]	1,972	5,917	--	--
Settleable Solids[2,]	ml/L	0.1	0.2	--	--
Copper (Total Recoverable)	µg/L	1.99	4.0	--	--
Formaldehyde	mg/L	0.1	--	--	--
Chloride	mg/L	106	--	--	--

[1] *Total of PND-001, PND-002 and EFF-003.*
[2] *Effluent limitations are net values (increase over source water).*
[3] *Based on a design flow of 47.3 mgd.*

3.3 Silverado Fisheries Base and the Center for Aquatic Biology and Aquaculture (CABA)

Silverado and CABA are proposed as locations to be used to quarantine the juveniles/eggs collected at FRFH. Silverado is located in Napa County near Yountville. Silverado takes its water from Rector Reservoir on Rector Creek a tributary of the Napa River. Silverado is permitted 1.6 million gallons of water per day. Unlike most of the hatcheries run by CDFG Silverado does not have a NPDES permit because the quantity of fish they produce is less than the biomass limit or flow limit that would require an NPDES permit for a cold-water concentrated aquatic animal production facility.

CABA was established to provide support to University of California Davis researchers in addressing problems associated with California's cultured and wild aquatic biological resources. The university has all the appropriate water use and discharge permits.

3.4 San Joaquin River

3.4.1. Introduction

Although no fish are to be released until the establishment of the 10(j) rule because the Proposed Action includes placement of incubator or holding pens in the San Joaquin River a brief description of the river basin has been included. The San Joaquin River basin, which encompasses about 7,017,000 acres, is the primary drainage in the San Joaquin Valley. The San Joaquin River flows northward toward the Delta, draining the central southern portion. Major tributaries to the San Joaquin River include the Stanislaus, Tuolumne, and Merced rivers, as well as the smaller Chowchilla, and Fresno Rivers, which originate in the Sierra Nevada. The Draft Program Environmental Impact Statement/Report (Draft PEIS/EIR) for the SJRRP divides the San Joaquin River into five reaches starting from Friant Dam. Reach 1 is from Friant Dam to (RM 267) to Gravelly Ford (RM 229). The SJFH and proposed area where holding pens could be used are in Reach 1.

3.4.2. San Joaquin Fish Hatchery (SJFH) and Salmon Conservation Facility

As part of the Proposed Action the 10(a)(1)(A) collection of eggs or juveniles to be used for broodstock will need a place to be held. As proposed, an existing Interim Facility will first be used. Later a larger Conservation Facility will be constructed by CDFG and eggs and broodstock would be kept there.

The CDFG operates the SJFH for trout near the town of Friant, California, located approximately one mile downstream of Friant Dam, and about 20 miles northeast of Fresno (Fresno County). Water for the hatchery and the Interim Facility is supplied from Millerton Lake, located behind Friant Dam. The water supply is aerated. The existing SJFH has used this water source to successfully hatch and raise trout at the site since 1955 due to favorable water temperature and water quality conditions.

The source water for the SJFH is a continuous 35 cubic foot per second (cfs) supply gravity-fed directly from Friant Dam. Prior to reaching the hatchery, the water passes through the Fishwater Release Hydropower Plant, which is owned by the Orange Cove Irrigation District. The flows are delivered to the power plant through two different pipelines: a 24-inch diameter pipeline from two Friant Dam penstocks, and a 30-inch diameter pipeline that takes water from the Friant Kern Canal penstock near the left dam abutment. CDFG is currently in negations with Reclamation to secure additional water for the Conservation Facility. Once additional water is secured the water supply is anticipated to be equally as reliable as the SJFH.

The small-scale, Interim Facility is located on the grounds of SJFH and will be operational until the full-scale Conservation Facility is constructed. The full-scale Conservation Facility is anticipated to be operational in 2014, at which time both facilities would be integrated together. Construction funding for the Interim Facility and the long-term Conservation Facility is provided by the State of California. The CDFG started to build the Interim Facility in 2010 and has been expanding and testing the system since then. Planning and permitting activities for the full-scale Conservation Facility are in process with CDFG as the lead agency.

The pathogen and quarantine procedures for transporting eggs from the Feather River to another watershed may require holding at the CDFG holding facility at Silverado. This facility is operated on an ongoing basis to serve the needs of its hatchery system. Alternative fish culture facilities exist at the CABA.

3.4.3 Water Quality

3.4.3.1 San Joaquin Fish Hatchery and Salmon Conservation Facility

The temperature of the water in each pipeline that services the SJFH and Interim Facility varies throughout the year; valves are used to control the flows to create favorable temperature conditions at the hatchery. Temperatures at the SJFH are typically maintained between 45-55ºF (7.2-12.8ºC) throughout the year, occasionally dipping as low as 42ºF (5.6ºC) or peaking as high as 58ºF (14.4ºC). Hatchery water and the adjacent river water are of the same origin and fairly similar in quality and temperature; however, the temperatures of the hatchery water are moderated due to the ability to adjust water temperatures at the mixing valves located at the Fishwater Release Hydropower Plant. If the planning process for the construction and operation of the Conservation Facility reveals that changes to the water supply may be needed, the effects of that action will be analyzed at that later time.

Unless cited otherwise, the remaining discussion of water quality in the Restoration Area is from the Draft Program Environmental Impact Statement/Report (Draft PEIS/EIR) for the SJRRP. Water quality conditions are substantially different in reaches of the action area as described below.

3.4.3.2 San Joaquin River Reach 1

The Draft PEIS/EIR describes the water quality in Reach 1 as being influenced by releases from Friant Dam, with minor contributions from agricultural and urban return flows. The Draft PEIS/EIR goes on to state that water quality data collected from the San Joaquin River below Friant Dam demonstrate the generally high quality of water released at Friant Dam from Millerton Lake to Reach 1. Temperatures of San Joaquin River water releases to Reach 1 are dependent on the cold-water volume available at Millerton Lake.

3.5. Fish

Spring-run Chinook is listed as a threatened species under the ESA. The Sacramento River Basin supports the remaining extant Central Valley spring-run Chinook populations. Sacramento River tributary watersheds that have runs include the Feather River, Yuba River, Deer Creek, Mill Creek, Butte Creek, Clear Creek and Battle Creek. (SJRRP, Stock Selection Strategy 2010). While there is a wild river spawning population, a component of the Feather River spring-run Chinook population is spawned at the FRFH. Spring-run Chinook have been extirpated from the San Joaquin basin with rare occurrences in the Stanislaus and Mokelumne Rivers. The proposed collection of surplus eggs and juveniles from FRFH would refine methodologies for handling and propagating spring-run Chinook and would be an initial step in preparation for release of spring-run Chinook at some future time.

3.5.1 San Joaquin River Reach 1

Fish assemblages currently found in the San Joaquin River are the result of substantial changes to the physical environment, combined with more than a century of nonnative species introductions. Areas where unique and highly endemic fish assemblages once occurred are now inhabited by assemblages composed primarily of introduced species.

Of the approximately 21 native fish species historically present in the San Joaquin River, at least 8 are now uncommon, rare, or extinct, and an entire fish assemblage – the deep bodied fish assemblage (e.g., Sacramento splittail, Sacramento blackfish) has been largely replaced by nonnative warm-water fish species (e.g., carp, catfish) (Moyle 2002). Warm-water fish assemblages, comprising many nonnative species such as black bass species and sunfish species, appear better adapted to current, disturbed habitat conditions (slightly higher gradient, cooler water temperatures, and higher water velocities) and seem to have restricted many introduced species from colonizing sections of the river. Table 3-4 lists the occurrence of fish species within Reach 1.

Table 3-4 Native and non-native fish found in the San Joaquin River in Reach 1

Native Fish	rainbow trout, Sacramento sucker, threespine stickleback, lamprey species, sculpin species (riffle and prickly), and Sacramento pikeminnow hardhead tule perch
Non-Native	green sunfish, western mosquitofish, largemouth bass, redear sunfish, brown bullhead, black crappie, bluegill, channel catfish, common carp, goldfish, golden shiner, kokanee, spotted bass, striped bass

List Compiled from SJRRP DEIS/R 2011

3.6 Air Quality

3.6.1 Air Basins and Attainment Status

This section provides a description of the air basins in which the Proposed Action are located and a summary table of the Attainment Status within the air basin. Description of individual pollutants and the regulatory setting are found in the Draft PEIS/EIR for the SJRRP and are incorporated by reference.

The 10(a)(1)(A) application details the activities of collecting eggs and juveniles from the FRFH and includes pathogen and quarantine procedures for transporting eggs from the Feather River to another watershed. These procedures require holding at Silverado or at CABA. The final holding area for eggs or broodstock would be at the Interim Conservation facility located on the San Joaquin River at Friant.

While the distance between the FRFH, Silverado and CABA is relatively close, each is within either its own air basin. Both FRFH and CABA are located within the Sacramento Valley Air Basin. Silverado is in Napa County which is within the Bay Area Air Basin. Lastly the Interim Conservation facility is within the San Joaquin Air Basin.

The Sacramento Valley Air Basin (SVAB) consists of northern portion of the Central Valley of California. The SVAB contain all or part of 11 counties (Shasta, Tehama, Butte, Glenn, Colusa, Yuba, Sutter, Yolo, Placer, Sacramento, and eastern Solano). The basin is ringed by tall mountains with the Coast Range to the west, Cascade Range to the north, the Sierra Nevada to the east. Seasonally the winters in the SVAB are cool and wet with the summers being hot and dry. The San Francisco Bay Air Basin (SFB) consists of the nine counties that surround the San Francisco Bay (Napa, western Solano, Contra Costa, Alameda, Santa Clara, San Mateo, San Francisco, Marin, and southern Sonoma). The San Francisco and San Pablo bays are surrounded by low hill and mountains of the Coast Range. While cooler than the SVAB the eastern portions of the basin can still be very warm in the summer months.

The Interim Conservation facility is located in Fresno, county, which are part of the San Joaquin Valley Air Basin (SJVAB). The SJVAB also includes all of Madera, Merced, Kings, San Joaquin, Stanislaus, and Tulare counties and the valley portion of Kern County. The SJVAB occupies the southern half of the Central Valley. The SJVAB is a well-defined climatic region with distinct topographic features on three sides. The Coast Range is located on the western border of the SJVAB. The Tehachapi Mountains are located on the south side of the SJVAB. The Sierra Nevada forms the eastern border of the SJVAB. The northernmost portion of the SJVAB is San Joaquin County. No topographic feature delineates the northern edge of the basin. The SJVAB can be considered a “bowl” open only to the north and connected to the Sacramento Valley and Bay Area Air Basins.

Like the SVAB the inland Mediterranean climate type of the SJVAB is characterized by hot, dry summers and cool, rainy winters.

Table 3-5 summarizes the Attainment Status Designations for the counties of the three air basins.

Table 3-5 Summary of Attainment Status Designations for the Sacramento, San Joaquin and Bay Area Air Basins

Pollutant	**Averaging Time**	**Attainment Status**
Ozone	1-hour	Nonattainment- Severe: San Joaquin Valley, Moderate: Butte, Colusa, Yuba, Glenn, Tehema, and Shasta Counties Serious: Napa, Yolo, Sacramento Sutter Counties
	8-hour	–
Carbon Monoxide (CO)	1-hour	Attainment Kern, Tulare, Fresno, Stanislaus, San Joaquin, Sacramento, Napa, Yolo, Sutter, Butte Counties Unclassified Madera, Merced, Yuba, Colusa, Glenn, Tehema, and Shasta Counties)
	8-hour	
Nitrogen Dioxide (NO_2)	Annual Arithmetic Mean	-
	1-hour	Attainment
Sulfur Dioxide (SO_2)	Annual Arithmetic Mean	-
	24-hour	Attainment
	3-hour	-
	1-hour	Attainment
Respirable Particulate Matter (PM_{10})	Annual Arithmetic Mean	Nonattainment
	24-hour	
Fine Particulate Matter ($PM_{2.5}$)	Annual Arithmetic Mean	Nonattainment: San Joaquin Valley, Sacramento, Butte, and Napa Counties. Attainment: Sutter, Yuba, Colusa, and Shasta Counties. Unclassified: Yolo, Glenn, and Tehema Counties
	24-hour	-
Lead	30-day Average	Attainment
	Calendar Quarter	-
Sulfates	24-hour	Attainment
Hydrogen Sulfide	1-hour	Unclassified
Vinyl Chloride	24-hour	Unclassified/ Attainment
Visibility Reducing Particle Matter	8-hour	Unclassified

Sources: ARB 2012, (SJVAPCD 2008b; ARB 2008c, 2008d; EPA 2008c) In Draft PEIS/EIR 2011

3.6.2 Odors.

In addition to the discussion of the San Joaquin Air Basin and its air quality, the air quality section of the PEIS/EIR also included a discussion regarding odors. That discussion is presented below.

Odors are generally regarded as an annoyance rather than a health hazard. However, manifestations of a person's reaction to foul odors can range from psychological (e.g., irritation, anger, anxiety) to physiological (e.g., circulatory and respiratory effects, nausea, vomiting, headache).

The ability to detect odors varies considerably among the population and overall is quite subjective. Some individuals have the ability to smell very minute quantities of specific substances; others may not have the same sensitivity but may have sensitivities to odors of other substances. In addition, people may have different reactions to the same odor; an odor that is offensive to one person may be perfectly acceptable to another. It is important to also note that an unfamiliar odor is more easily detected and is more likely to cause complaints than a familiar one. This is because of the phenomenon known as odor fatigue, in which a person can become desensitized to almost any odor and recognition only occurs with an alteration in the intensity.

Quality and intensity are two properties present in any odor. The quality of an odor indicates the nature of the smell experience. For instance, if a person describes an odor as flowery or sweet, the person is describing the quality of the odor. Intensity refers to the strength of the odor. For example, a person may use the word strong to describe the intensity of an odor. Odor intensity depends on the odorant concentration in the air. When an odorous sample is progressively diluted, the odorant concentration decreases. As this occurs, the odor intensity weakens and eventually becomes so low that the detection or recognition of the odor is quite difficult. At some point during dilution, the concentration of the odorant reaches a detection threshold. An odorant concentration below the detection threshold means that the concentration in the air is not detectable by the average human.

Potential existing sources of odor include various agricultural activities in the vicinity (e.g., dairy operations, livestock operations, fertilizer use). It should be noted that the PEIS/EIR does not identify the existing SJFH as being an odor source.

3.7 Climate Change and Greenhouse Gas Emissions

Chapter 7 of the SJRRP Draft PEIS/EIR describes the environmental setting for climate change and GHG emissions. The discussion of climate change and the potential impacts of the program alternatives on climate change encompasses the San Joaquin River from Friant Dam to the Merced River, the San Joaquin River from the Merced River to the Delta, and the Delta.

Scientific evidence suggests that many climatic conditions are already changing and will continue to change in the future. Therefore, expected future climate changes that have the potential to affect implementation and performance of the program were also considered in the PEIS/EIR. These included changes in snowpack and the timing and magnitude of snowmelt runoff and flood flows, which would in

turn influence storage, and delivery. Furthermore, sea level rise could affect San Francisco Bay and conditions in the Delta. However, the considerations in the Draft PEIS/EIR where associated with future CVP/SWP operations.

The affected for climate change analysis is global, with State and local implications. The Draft PEIS/EIR discussion provided a background overview of global climate change (which has been incorporated by reference), and climate trends and associated impacts at the global and State levels are then described, followed by an overview of GHG emissions sources in California and in SJVAB.

3.7.1 Global Climate Trends and Associated Impacts

The rate of increase in global average surface temperature over the last hundred years has not been consistent; the last three decades have warmed at a much faster rate – on average 0.32°F per decade. Eleven of the 12 years from 1995 to 2006, rank among the warmest years in the instrumental record of global average surface temperature (going back to 1850) (IPCC 2007a).

During the same period over which this increased global warming has occurred, many other changes have occurred in other natural systems. Sea levels have risen on average 1.8 mm/year; precipitation patterns throughout the world have shifted, with some areas becoming wetter and other drier; tropical cyclone activity in the North Atlantic has increased; peak runoff timing of many glacial and snow-fed rivers has shifted earlier; as well as numerous other observed conditions. Though it is difficult to prove a definitive cause and effect relationship between global warming and other observed changes to natural systems, there is high confidence in the scientific community that these changes are a direct result of increased global temperatures (IPCC 2007a).

3.7.2 California Climate Trends and Associated Impacts

Maximum (daytime) and minimum (nighttime) temperatures are increasing almost everywhere in California but at different rates. The annual minimum temperature averaged over all of California has increased 0.33°F per decade during the period 1920 to 2003, while the average annual maximum temperature has increased 0.1°F per decade (Moser et al. 2009).

With respect to California's water resources, the most significant impacts of global warming have been changes to the water cycle and sea level rise. Over the past century, the precipitation mix between snow and rain has shifted in favor of more rainfall and less snow (Mote et al. 2005, Knowles 2006) and snow pack in the Sierra Nevada is melting earlier in the spring (Kapnick and Hall 2009). The average early spring snowpack in the Sierra Nevada has decreased by about 10 percent during the last century, a loss of 1.5 million acre-feet of snowpack storage (CDWR 2008). These changes have significant implications for water supply, flooding, aquatic ecosystems, energy generation, and recreation throughout the state. During the same period, sea levels along California's coast rose seven inches (CDWR 2008). Sea level rise associated with global warming will continue to threaten coastal lands and infrastructure, increase flooding at the mouths of rivers, place additional stress on levees in the Sacramento-San Joaquin Delta,

and will intensify the difficulty of managing the Sacramento-San Joaquin Delta as the heart of the state's water supply system.

These trends in California's water supply could impact the SJRRP by further straining the scarce resources needed to implement appropriately-timed Restoration Flows, while balancing the need to irrigate cropland and supply drinking water to large numbers of Californians. Increased surface temperatures may affect stream quality for fish and their prey, changing the biological conditions under which the SJRRP operates. In addition, increased frequency and severity of flood events could negatively impact fragile or restored areas such as gravel bars and riparian habitat.

3.7.3 Greenhouse Gas Emissions Sources and Inventory

Human activities contribute to climate in many ways, but primarily by causing changes in the atmospheric concentrations of GHGs and aerosols. The largest anthropogenic contribution to climate change is the burning of fossil fuels, which releases CO2 and other GHGs to the atmosphere. Since the start of the industrial era (about 1750), the use of fossil fuels has increased through activities such as transportation, building heating and cooling, and the manufacture of cement and other goods. Land use changes, such as wide-scale deforestation, the use of fertilizers, and draining of wetlands also contribute to GHG emissions worldwide. The rate of increase in GHG concentrations has increased during the last century, with an increase of 70 percent between 1970 and 2004 alone (IPCC 2007a). During this period, the two largest sectors of GHG emissions were the energy supply (with an increase of over 145 percent) and transportation (with a growth of over 120 percent) sectors. The slowest growth during the 1970 to 2004 period was in the agricultural sector with 27 percent growth and the residential/commercial buildings sector at 26 percent (IPCC 2007b).

California is the 12th to 16th largest emitter of CO2 in the world (CEC 2006). In California, the transportation sector is the largest emitter of GHGs, followed by electricity generation (CEC 2006). California produced 484 million gross metric tons (mt) of CO2 equivalent in 2004.Combustion of fossil fuel in the transportation sector was the single largest source of California's GHG emissions in 2004, accounting for 35 percent of total GHG emissions in the State (CEC 2006). This sector was followed by the electric power sector (including both in-State and out-of-State sources) (22 percent) and the industrial sector (21 percent) (CEC 2006). No GHG emissions inventory has been conducted for the SJVAB at this time.

SECTION 4 ENVIRONMENTAL CONSEQUENCES

The Proposed Action potentially can affect the physical or biological resources within the action area. The following is an analysis of the potential environmental consequences on the major components of the environment based on the current affected environment conditions described in Section 3 (Affected Environment), above, organized by the alternatives considered in Section 2 (Alternatives Including the Proposed Action). This analysis considers that life of this permit requested is five years, and would allow collection of a limited number of eggs or juveniles. No spring-run Chinook will be released to the San Joaquin River until an experimental population designation is completed. The analysis of that designation will include evaluation of the environmental effects of a fully implemented spring-run Chinook reintroduction.

4.1 Hatchery Facilities: FRFH, Silverado, CABA and SJFH with Interim Facility

4.1.1 No Action Alternative.

The FRFH, Silverado, CABA and SJFH with the Interim Facility are all existing facilities as discussed in Section 3. Under the No Action Alternative there would be no changes to the current operations of the FRFH, Silverado, or CABA. Within the San Joaquin River, the San Joaquin Fish Hatchery would continue operations with trout. The Interim Facility would be used to support existing hatchery operations or activities related to the re-establishment of fall-run Chinook under the SJRRP. The Conservation Facility likely would not be built or operated. Therefore there would be no change to either the Feather River or the San Joaquin Fish Hatchery operations or the environment.

4.1.2 Proposed Action

The Proposed Action would mean that there would be some operational changes regarding the handling of eggs or juveniles at each of the facilities, but these changes would not require any physical changes to these facilities. Therefore no significant impacts are anticipated to occur at these facilities. The Conservation Facility is to be funded constructed and operated the State of California and Reclamation and will require its own environmental analysis. Potential cumulative impacts from construction and operation of the Conservation Facility are discussed in Section 5. Cumulative Impacts.

4.2 Water Quality

4.2.1 No Action Alternative.

Under the No Action Alternative there would be no changes to the current operations of the FRFH or the SJFH. Therefore there would be no change to water quality of either the Feather River or the San Joaquin River.

4.2.2 Proposed Action

Under the proposed action the FRFH operations would not change and would remain subject to its current discharge permit. Therefore the proposed collection of surplus eggs from the FRFH would not affect the water quality of the Feather River.

Similarly, the operations would not change at the existing Silverado Base or CABA as a result of the proposed Action, so that there would be no change in their permitted discharge. No impacts to water quality from the operations of the Silverado Base and CABA are anticipated.

Currently there are no water quality issues along Reach 1 of the San Joaquin River where the Interim Facility is located and the subsequent Conservation Facility will be located. Operations of the subsequent Conservation Facility would require discharge permits that require monitoring and reporting to assure that discharged water would not impact water quality of the San Joaquin River. The proposed use of holding pens in and adjacent to the river would either have water pumped to the pens and then discharged back to the river, or have water flow through the pens from river currents. These discharges would be considered, by the permitting authority, separately from the discharge from either the Interim Facility or Conservation Facility and would require their own permits. The permit conditions established for both the hatchery activities and for the use of holding pens would require that discharges from either the facility, or the holding pens will not adversely affect ambient water quality. Therefore, under the proposed action the operation of the pens and the facilities would not have a significant effect on water quality.

4.3 Fish

4.3.1 No Action Alternative

Under the No Action Alternative no eggs or juvenile spring-run Chinook would be collected. However, the improvement projects of the SJRRP would be carried out; therefore, existing barriers would be removed as part of the SJRRP. While it is expected that under improved conditions, salmonids would find their way into the San Joaquin River it is likely that there would be no large scale change from the existing fish populations, based on fish assemblages in the Merced, Tuolumne, and Stanislaus rivers.

4.3.2 Proposed Action

The potential impacts from the issuance of the permit to fish populations in the Feather River are discussed in detail below.

4.3.2.1 Feather River Effects

As proposed the 10(a)(1)(A) will permit the collection of 80,000 surplus eggs or 54,400 surplus juveniles from the FRFH along with up to 2,760 (560 in years 1-3, and 2,760 in years 4-5) surplus juveniles or eyed eggs . Both the 80,000 eggs and juveniles are surplus and would not have otherwise been cultured and placed into the Feather River. As such there is no reduction in the number of hatchery spawned eggs

entering the Feather River so there would be no impact to the spring-run Chinook population on the Feather River, nor to the ESU.

4.3.2.2 San Joaquin River Effects

Although fish would not be released into the San Joaquin River some of the proposed activities could potentially generate impacts to the river and the existing fish populations. Potential impacts include changes to water quality from discharges to the river from the hatchery or from possible exposure to disease.

As discussed in Section 4.2.2 there are no existing water quality issues associated with operations of the SJFH or the Interim Facility and any future use of these facilities for holding eggs or broodstock would not alter the operations as to the discharge of water. Therefore no impacts would occur resulting from discharge from the SJFH or Interim Facility. Operations of the holding pens or stream side incubators and the subsequent Conservation Facility would each require discharge permits that require monitoring and reporting to assure that discharged water would not impact water quality of the San Joaquin River. Therefore the Proposed Action would not have any significant impacts to water quality that would impact fish populations.

Since eggs or juveniles will be collected from outside of the San Joaquin River basin there is the potential for eggs or juveniles being translocated into the San Joaquin River would increase the potential for disease transmission. However, given the methodologies for collection and handling or quarantining any eggs and fish prior to locating the eggs or fish to the San Joaquin the potential effects related to the introduction of disease to the existing populations would not be significant. This would also be the case for eggs or juveniles placed in incubation or holding pens. Any egg or juvenile that would have been collected for placement into one of the holding pens would have undergone clearance or quarantine prior to being placed into the container. As proposed all fish would be quarantined, but not all eggs. Any eggs not sent to quarantine will have been collected from Infectious Hematopoietic Necrosis Virus (IHNV) and Bacterial Kidney Disease (BKD) negative females, and all eggs will be properly disinfected prior to transport.

Since holding pens would be placed into the river it is possible that pathogens or disease to be transferred from nets and other equipment not appropriately decontaminated prior to use. A condition of the permit will include that all equipment will be properly cleaned and decontaminated to reduce the spread of pathogens. Impacts would not be significant.

Populations with low genetic diversity are generally at a higher risk of extinction. The Permit includes methodology to enhance the genetic diversity of the hatchery crosses collected and to ensure that the crosses are from adults who are second generation phenotypic spring-run Chinook. As part of the Permit the Proposed Action includes a plan (i.e., the HGMP) to monitor the genetics of the successful stocks to document founding individuals.

4.4 Air Quality

4.4.1 No Action Alternative

Under the No Action Alternative spring-run Chinook donor stock would not be collected. Therefore under the No Action Alternative there would be no air emissions from vehicles used in collection and transportation. There would be no impacts to air quality under the no action alternative.

4.4.2 Proposed Action

Since existing facilities would be used until the Conservation Facility is built by the State of California, and for which a separate environmental analysis would be done, there would be no operational emissions associated with the 10(a)(1)(A) permit. The proposed action would generate air emissions from vehicles used to collect and transport to a holding area the fish (or eggs). However, given that there would be only a small number of trips (i.e. less than 25 trips per year) that would be generated to collect and transport the collected fish or eggs that the resulting emissions would have no significant impacts to air quality.

While the Draft PEIS/EIR discusses potential odors associated with construction of river restoration projects, the potential of significant odor impacts associated with the construction and operation of the Conservation Facility related to the hatchery was too speculative for meaningful consideration. Any impacts of constructing a new hatchery or expanding an existing hatchery would need to be addressed during environmental review of the proposed hatchery. It should be noted that the current hatchery is not identified as being a source for odors and it is likely that future analysis for the proposed Conservation Facility would likely determine that with proper maintenance or operation that odors would not be significant.

4.5 Climate Change

4.5.1 No Action Alternative

Under the No Action Alternative there would be no collection of eggs that would be transported to the San Joaquin River for propagation. Therefore there would be no additional emissions beyond those already associated with the operations of the FRFH, Silverado Base, CABA and the Interim Facility on the San Joaquin River.

4.5.2 Proposed Action

On September 22, 2009, EPA released its final Greenhouse Gas Reporting Rule (Reporting Rule). The Reporting Rule is a response to the fiscal year (FY) 2008 Consolidated Appropriations Act (House of Representatives 2764; Public Law 110-161), that required EPA to develop "… mandatory reporting of GHGs above appropriate thresholds in all sectors of the economy…." The Reporting Rule would apply to most entities that emit 25,000 mtCO2e or more per year. Starting in 2010, facility owners are required to submit an annual GHG emissions report with detailed calculations of facility GHG emissions. The Reporting Rule would also mandate recordkeeping and administrative requirements in order for EPA to verify annual GHG emissions reports. Since the emissions of GHGs for the Proposed Action would be substantially lower than the 25,000 $mtCO_2e$ threshold, the impacts to Climate Change from GHG emissions of the Proposed Action would be less than significant.

Section 5 Cumulative Impacts

NEPA defines cumulative impacts as "the impact on the environment which results from the incremental impact of the action when added to other past, present, and reasonably foreseeable future actions, regardless of what agency (Federal or non-Federal) or person undertakes such other actions" (40 CFR 1508.7). For the most part the potential Cumulative Impacts of the Proposed Action of itself would be negligible on spring-run Chinook or on the other resources discussed in this document. However, there are current and reasonably foreseeable future actions whose future cumulative impacts require discussion.

As discussed in Section 1 as the result of the Settlement agreement of NRDC, et al., v. Kirk Rodgers, et al., along with the passage of the Restoration Act established Restoration and Water Management Goals. In part of the fulfillment of these goals a number of projects were proposed that would make physical changes to the San Joaquin River that would be part of the restoration of the San Joaquin River. These projects and their potential impacts were discussed in the SJRRP's Draft PEIS/EIR. Potential Cumulative Impacts were identified for the SJRRP in the Draft PEIS/EIR and they are included here by reference. There is one specific impact discussion that is reproduced herein, that discussion is the analysis of Climate Change and the possible impacts of Climate Change on the fish population of the Proposed Action.

Climate change is predicted to bring profound changes to California's natural environment. Hayhoe et al. (2004) describe the results of four climate change models: compared with 1960–1991, by 2070–2099 statewide average annual temperatures will be 2.3°C–5.8°C higher, average annual precipitation will be reduced by >100 millimeters, sea level will have risen 19.2–40.9 centimeters, snowpack will have declined by 29%–89%, and change in annual inflow to reservoirs will decline by >20%. (One model predicted slight increases in precipitation, snowpack, and reservoir inflow.)

Changes in vegetation are also predicted (e.g., substantial decreases in the extent of alpine/subalpine forest, evergreen conifer forest, mixed evergreen woodland, and shrubland; and increases in mixed evergreen forest and grassland ([Hayhoe et al. 2004] as cited in Draft EIS/R). Climate change is likely to cumulatively affect native fishes and amphibians by increasing water temperatures (hence reducing dissolved oxygen), reducing stream flows, and increasing the likelihood of drought-related fires. A rise in sea level would lead to increasing rates of erosion, sedimentation, flooding, and inundation of low-lying coastal ecosystems. With reductions in snowmelt runoff, peak flows may come earlier as rainfall contributes more, which could affect species such as Central Valley spring-run Chinook that have evolved their life history based on predictable runoff patterns (Williams 2006). Increasing temperatures may increase metabolic needs of fish predators and increase predation (Lindley et al. 2007). Moyle et al. (2008) qualitatively assessed the potential for climate-related impacts on California's native salmonids (Table 5-1). Their analysis indicated that the majority of taxa (18 of 29, 62%) were vulnerable in all or most of the watersheds inhabited; no taxon was invulnerable to climate change.

Table 5-1. Qualitative Assessment of California Salmonids' Vulnerability to Climate Change

Vulnerability	**Taxon**
Vulnerable in all watersheds inhabited	Klamath Mountains Province summer steelhead[SSC]; northern California coastal summer steelhead[FT, SSC]; central California coast steelhead[FT]; south-central California coast steelhead[FT, SSC]; southern steelhead[FE, SSC]; upper Klamath–Trinity Rivers spring-run Chinook salmon[SSC]; Central Valley late fall–run Chinook salmon[SC, SSC]; Sacramento winter-run Chinook salmon[FE, SE]; Central Valley spring-run Chinook salmon[FT, ST]; southern Oregon– northern California coastal Coho salmon[FT, ST]; central California coast Coho salmon[FE, SE]; McCloud River redband trout[SSC]; Eagle Lake rainbow trout[SSC]; Lahontan cutthroat trout[FT]
Vulnerable in most watersheds inhabited (possible refuges present)	Central Valley steelhead[FT]; upper Klamath–Trinity Rivers fall-run Chinook salmon; California coast Chinook salmon[FT]; Goose Lake redband trout[SC]; coastal cutthroat trout[SSC]
Vulnerable in portions of watershed inhabited (e.g., headwaters and lowermost reaches of coastal streams)	Northern California coastal winter steelhead[FT]; Central Valley fall-run Chinook salmon[SC]; California golden trout[SC, SSC]; Little Kern golden trout[FT]; Kern River rainbow trout[SC, SSC]; Paiute cutthroat trout[FT]; mountain whitefish
Low vulnerability due to location, cold water sources, or active management	Klamath Mountains Province winter steelhead; resident coastal rainbow trout; southern Oregon–northern California coastal Chinook salmon
Not vulnerable to significant population loss due to climate change	None

Notes:
FE = endangered (federal).
FT = threatened (federal).
SE = endangered (state).
ST = threatened (state).
SC = species of concern (federal).
SSC = species of special concern (state).

Source: Moyle et al. 2008.

The Draft PEIS/EIR takes a programmatic approach to the discussion of impacts. The Draft PEIS/EIR does not specifically analyze the potential impacts of specific actions such as the issuance of the 10(a)(1)(A) Incremental impacts on the environment are included in the resource analyses in Section 4, Environmental Consequences. It is not anticipated that impacts to water quality or air quality, would be

cumulatively impacted. However, the 10(a)(1)(A) permit has a condition that before any release occurs under the permit, an experimental population, as defined under section 10(j) of the ESA must be completed. This condition is the directly from Restoration Act that mandates that spring-run Chinook reintroduced into the San Joaquin River under the SJRRP shall be as an experimental population pursuant to section10(j) of the ESA of 1973 (16 U.S.C. 1539(j)) and the Settlement, provided that the Secretary of Commerce finds that a permit for the reintroduction of California Central Valley Spring Run Chinook salmon may be issued pursuant to section 10(a)(1)(A) of the Endangered Species Act of 1973 (16 U.S.C. 1539(a)(1)(A)). While this permit is intended to initiate the reintroduction process, it is a small step, with minimal impact because of the low numbers and surplus fish being used. The pre-release actions will provide important information and it also is not an irretrievable commitment of resources if the 10(j) is delayed.

The establishment of the experimental population and other SJRRP projects would work in concert with other ongoing recovery and reintroduction efforts and would enhance NMFS' flexibility and discretion in managing listed Central Valley Salmon conservation. Monitoring and adaptive management would help ensure that the experimental population of spring-run Chinook is adequately protected and supported by restoration actions implemented through the SJRRP.

Cumulatively, the implementation of the 10(a)(1)(A) permit would be consistent with the goals and objectives of ongoing spring-run Chinook recovery activities in the Central Valley. The San Joaquin River Restoration Area in which the experimental population is to be established has been substantially degraded in terms of fish habitat and access to spawning areas from past actions, most importantly, by the impacts from dam development and water withdrawals. When combined with several current and future restoration actions in the SJRRP including the construction and operation of the Conservation Facility by the CDFG, an experimental population designation could lead to improved conditions for fish habitat more quickly because of the incentive for public and private entities to implement the conservation measures during a period of limited take liabilities, when compared to conservation efforts without such a designation.

NMFS does not anticipate negative, direct, or indirect impacts to listed fish during the experimental population designation period because of the practices identified in the HGMP which include methods and monitoring to protect the genetic integrity and to minimize hatchery influence. Thus there will be no cumulative adverse effects if experimental population salmon naturally stray to existing populations Also Fisheries Management Plan (SJRRP 2010) includes an adaptive management program, and monitoring of the ongoing restoration activities associated with the SJRRP.

This page intentionally left blank.

Section 6 References

Bureau of Reclamation, California Department of Water Resources. (SJRRP/ Draft EIS/R)2011. Draft San Joaquin River Restoration Program Environmental Impact Statement/Environmental Impact Report.

California Department of Fish and Game. 2009. Grandtab Chinook Census Database compiled by Jason Azat February 18, 2009. Available at http://nrm.dfg.ca.gov/documents/. Cited in Stock Selection Strategy.

Federal Energy Regulatory Commission (FERC). 2007. FERC Project 2100, May 2007 Draft Environmental Impact Report Oroville Facilities Relicensing—FERC Project No. 2100. Cited in PEIS/R

Federal Register / Vol. 64, No. 179 / Thursday, September 16, 1999 / Endangered and Threatened Species; Threatened Status for Two Chinook Salmon Evolutionarily Significant Units (ESUs) in California. Final Rule

Federal Register /Vol. 76, No. 157 /Monday, August 15, 2011 Endangered and Threatened Species 5-Year Reviews for 5 Evolutionarily Significant Units of Pacific Salmon and 1 Distinct Population Segment of Steelhead in California

Hayhoe et al. 2004. Emissions Pathways, Climate Change, and Impacts on California. *Proceedings of the National Academy of Sciences of the United States of America* , Vol. 101, No. 34 (Aug. 24, 2004), pp. 12422-12427 Cited in Draft PRIS/R

Intergovernmental Planel on Climate Change (IPCC). 2007a Climate Change 2007. The physical Science Basis. Contribuiton of Working Group I to the Fourth Assessment Report of the IPCC. Geneva. Swizerland. Cited in Draft PEIS/R

Intergovernmental Planel on Climate Change (IPCC)., 2007b. Climate Change 2007. Synthesis Report. Contributions pf Working Groups I, II, III to the Fourth Assessment Report of the Intergovernmental Planel on Climate Change, Geneva, Switzerland. Cited in Draft PEIS/R

Lindley, S.T., R.S. Schick, E. Mora, P.B. Adams, J.J. Anderson, S. Grene, C. Hanson, B.P. May, D. McEwan, R.B. MacFalane, C. Swanson, and J.G. Williams. 2007. Framework for Assessing Viability of Threatened and Endangered Chinook Salmon and Steelhead in The Sacramento-San Joaquin Basin. San Francisco Estuary and Watershed Science 5(1): article 4. February. Cited in Draft PEIS/R

Moser, Susan, et al. 2009. The Future is Now: An Update on Climate Change Science, Impact, and Response Options for California. Prepared for the California Energy Commission, PIER. CEC-500-2008-071. Cited in Draft PEIS/R

Moyle, P.B. 2002. Inland Fishes of California. University of California Press, Berkeley. 502 pp. Cited in Fisheries Management Plan and Draft PEIS/R.

Moyle, P.B., J.A. Israel, and S.E. Purdy. 2008. Salmon, steelhead, and trout in California. Status of an emblematic fauna, a report commissioned by the California Trout. Center for watershed sciences. 316pp Cited in Stock Selection Strategy.

National Marine Fisheries Service. Endangered and Threatened Species: Final Listing Determinations for 16 ESUs of West Coast Salmon, and Final 4(d) Protective Regulations for Threatened Salmonid ESUs (Final Rule). Federal Register 70:123 (June 28, 2005) p. 37160

National Marine Fisheries Service (NMFS). 2009a Draft Central Valley Recovery Plan for the Evolutionarily Significant Units of Sacramento River Winter-run Chinook salmon and Central Valley Spring-run Chinook salmon, and the Distinct Population Segment of California Central Valley Steelhead. Sacramento Protected Resources Division. October 2009.

National Marine Fisheries Service (NMFS). 2009b. National Marine Fisheries Service. Public Draft Central Valley Recovery Plan. Appendix A: Watershed Profiles.

Reynolds FL, Mills TJ, Benthin R, Low A. 1993. Restoring Central Valley streams; a plan for action. Sacramento (CA): California Department of Fish and Game. 129 p Cited in Stock Selection Strategy

San Joaquin River Restoration Program (SJRRP, FMP), Fisheries Management Work Group (FMWG). March 2010. Fisheries Management Plan.

San Joaquin River Restoration Program (SJRRP, Stock Selection Strategy), Genetics Subgroup of the Fisheries Management Work Group (FMWG). May 2010. Stock Selection Strategy: Draft Spring-run Chinook salmon.

U.S. Fish and Wildlife Service (USFWS). 2011. Final §10(a)1(A), Enhancement of Species Permit Application for the Reintroduction of Central Valley Spring-Run Chinook into the San Joaquin River.

Williams, J.G. 2006. Central Valley salmon, a perspective on the Chinook and Steelhead in the Central Valley of California. San Francisco Estuary & Watershed Science 4(3): article 2. December 2006. Cited in Draft PEIS/R

Yoshiyama, R. M., Gerstung, E. R., Fisher, F. W., and Moyle, P. B. 2001 Historical and Present Distribution of Chinook Salmon in the Central Valley Drainage of California in Fish Bulletin 179 - Contributions to the Biology of Central Valley Salmonids, Volume 1 of 2.

Selection 7 List of Preparers

NMFS staff:

Rhonda Reed (B.S. Wildlife & Fisheries Biology, M.S. Ecology), 30 years of experience

Elif Fehm-Sullivan (MS Biology, BS Biology), 12 years of experience.

Contractor:

Kurtis Steinert (B.S. Marine Biology, M.S. Environment Science, A.I.C.P.), Ocean Associates Inc., 20 years of experience.

Section 8 Cooperating Agencies and Consulted Parties

8.1 Cooperating Agencies

California Department of Fish and Game

Margarita Gordus
Brian Erlandsen
Paul Adelizi

Bureau of Reclamation

Michelle Banonis

US Fish and Wildlife Service

Mark Littlefield
John Netto
Kim Webb

8.2 Consulted Parties

This page left blank intentionally.

Appendix 1

Under the Proposed 10(a)(1)(A) Permit Application a number of tools may be used to handle the eggs and / or juveniles collected at the Feather River Fish Hatchery (FRFH).

US Fish and Wildlife Service may use a variety of methods in the handling of eggs. Eggs may be hatched either streamside or in-stream in fully contained approved egg hatching equipment (deep matrix incubators, buried egg chambers, including tubes, plates or stacked trays). All equipment will be fully contained to facilitate required tagging/marking associated with subsequent releases to the San Joaquin River (Note: The 10(a)(1)(A) permit is for five years, however, until the establishment of the 10(j) experimental population no fish will be released. Therefore early in the permit period it is likely that smaller groups of eggs or juveniles will be used to determine the best methods for the various locations on the San Joaquin River.

Instream Egg Chambers

Instream egg chambers have the advantage of being completely buried to minimize vandalism and can be constructed to facilitate the collection of fry. Survival would be maximized by placement in riffles with high permeability, and low percent fines determined from previous studies.

Deep matrix incubators (deep matrix planting), involves placing eggs in a vertical chamber interspersed with clean gravel and burying the chamber in a riffle. A 3 ft. x 30 ft. chamber can contain approximately 40,000 eggs. Deep matrix planting can be used in experiments that test the effect of gravel quality on survival-to-emergence. For example, different mixtures of gravel, representing different levels of gravel quality, can be placed in a series of deep matrix chambers with a known number of eggs in each chamber. Subsequent emergence trapping can compare the number of fry that successfully emerge from each chamber representing different levels of gravel quality (Stillwater 2003). Figure A-1 shows an example of a deep matrix incubator without its lid.

Figure A-1 Deep Matrix Incubator example (source US patent 4,742, 798)

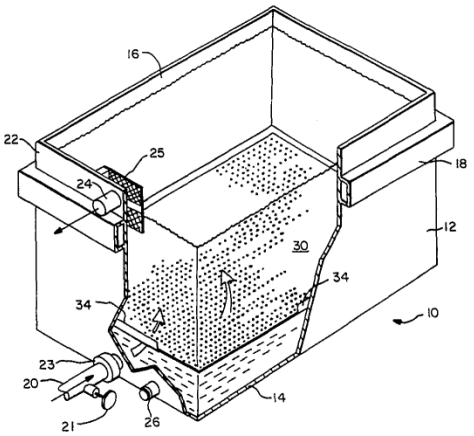

Another method of egg seeding is with Whitlock-Vibert boxes (WV boxes), which are small plastic boxes that can be buried in riffles (Whitlock 1995 as cited in Stillwater 2003). WV boxes can also be used in adaptive management experiments for the egg and emergent fry life history stages.. Figure A-2 shows WV box and its use.

Figure A-2 Whitlock Vibert Box in use

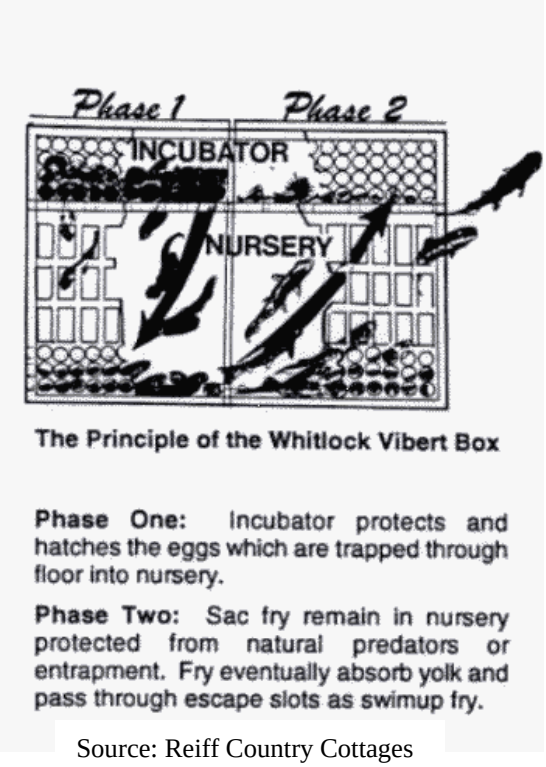

Source: Reiff Country Cottages

Although the figure shows that fry could escape, prior to the implementation of the 10(j) Rule no fish would be permitted release by decreasing the size of the "escape" openings, or through the use of netting around the box, or by removal of fry from the box. Furthermore, current plans call for the tagging of all fish so even after the establishment of the 10(j) fish would be removed and tagged prior to release (see Net Pen discussion).

One additional in-river incubation system the USFWS may use is egg tubes. Egg tubes would be constructed of standard dimension ratio 35-polyvinyl chloride (PVC) pipe with two PVC caps to close the tube ends (Figure A-3). According to the USFWS the length of the egg tubes would be shorter than the 305 mm (12 inch) length shown in the figure so that the tubes can be placed using a bottomless bucket. Eighteen, evenly spaced, 19-mm diameter holes will be drilled into each tube. The tube's inner surface will be covered with 0.35 mm mesh plastic screen typically used for egg incubation in steelhead and Chinook salmon hatcheries (Leitritz and Lewis 1980 as cited in Merz, 2004).

The proposed design for this reintroduction method would include 10 egg tubes placed in each of three artificial redds at 5 locations representing high quality spawning habitat in Reach 1 of the San Joaquin River Restoration Area, to maximize survival. Each artificial redd would consist of 5 egg pockets with 2 egg chambers in each. Each egg chamber would contain one packet of 200 eggs.

Site Preparation and Egg Tube Placement

One day prior to acquiring eggs, three artificial redds will be constructed at each site for egg chamber placement. Each artificial redd will be 10 feet long by 10 feet wide. The redds will be constructed by hand digging the entire area starting in the downstream sections and working upstream with hand-held McLeods and potato rakes. These tools allow water current to carry fines out of the area much like during the natural spawning process. Five bottomless buckets will be placed throughout the redd area for egg tube placement at a later date. Pockets will be constructed in an upstream progression, following the description of DeVries (1997 as cited in the DSCP Attachment B). A bottomless 5 gallon (19 liter) bucket

will be placed in the excavated area to maintain the egg pocket until egg chambers can be placed. At each study site, egg incubation chambers will be buried horizontally and perpendicular to stream flow at 22 cm deep, the approximate depth of egg pockets in Chinook salmon redds according to Healey (1991) and Montgomery et al. (1999). Bed material reserved upstream of pockets will be used to cover each egg chamber. Peizometers for measuring hyporheic conditions will be placed at the four corners of the artificial redds, and along the top margin and bottom margin in between each artificial redds. Surface water temperature, depth and velocity will be recorded at the head of the redd complex and at the tailspill of the redd complex. One Hobo temperature logger will be placed in the redd attached to an egg chamber at each site. The temperature logger will be set to record temperatures at 30 minute intervals. Physical measurements (depth, velocity, permeability) will be recorded 3 times during the incubation process.

Figure A-3. Diagram of constructed "redd" with egg tubes, stand pipe, and temperature logger (top view). The figure is not drawn to scale. Final tube design and use will differ from what is show, see discussion.

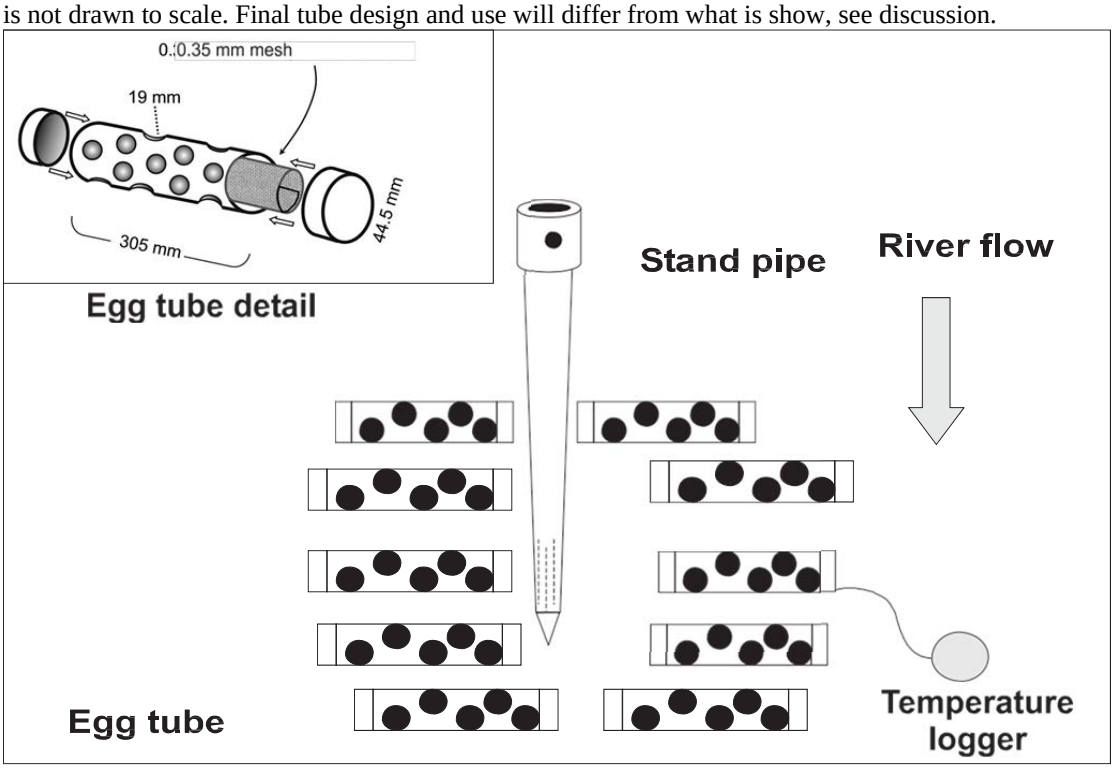

Source: Merz *et al*, 2004

Streamside Incubation

Streamside incubators have the advantage of incubating large numbers of eggs (e.g., 200,000 per incubator), easy collection of fry on a daily basis, and the ability to place the incubator near the dam where the potential vandalism should be reduced and water quality should be suitable for incubation. However, there is a potential for vandalism to the chamber and the complete loss of eggs.

The incubation boxes (two) will be plumbed in with flows at 5 gpm, per manufacturer's instructions. Eggs will be placed on top of the screen plate. Below the screen plate, Koch ring media or gravel should be 6 to 8 inches deep. During incubation and hatching dead eggs will be removed daily. Once eggs hatch

on top of the screen plate, fry should pass through the plate down into the Koch rings or gravel. Swim up fry can be trapped with the unit and collected. Trapped fry will be collected and transported and release at alternate locations (DSCP Attachment B, 2012).

All of the fry produced from instream egg chambers and streamside incubators will be transported to an area with suitable flow and water temperatures, where they would be held in net pens for a short period to assess their condition. It is anticipated that holding fish in net pens after transport will allow them to acclimate to their new conditions and thereby improve their chances for survival. Additionally, holding in net pens would increase the opportunity for incremental imprinting (2-4 weeks; Diane Deal ODFW, personal communication as cited in DSCP Attachment B, 2012). Net pens will be designed to minimize stress to juvenile salmon and allow them to feed naturally. It is anticipated that fry will be held in net pens for two to four weeks. Salmon fry will be held long enough to be implanted with CWT or PIT tags and to determine tag shed rates before release into the river.

Streamside Holding Tanks

The USFWS may utilize different brands/types/material/sizes of holding tanks throughout the reintroduction period. Holding tanks may be erected on the ground or housed inside a trailer. All tanks would be covered to prevent predation and automatic feeders would be housed in tamper proof containers bolted to the tank. Housing tanks in trailers would offer added security. If possible, a temporary fence may be erected around the holding tank to deter vandalism. The tanks would be equipped with a flow through water system, and monitored daily for dissolved oxygen and temperature. Dissolved oxygen levels should be maintained near saturation (approximately between 80-100 percent), and water temperature should not exceed 16ºC. If the dissolved oxygen levels drop below 80 percent saturation then the water would be oxygenated using bottled oxygen with oxygen stones and impellor driven aerators, or fish densities would be lowered by, for example, transferring fish to other tanks. Both total suspended solid and carbon dioxide levels will be maintained at or below 10 mg/L. All tanks would be cleaned as needed, and the automatic feeders would be checked and reloaded once a day (USFWS 2012).

Net Pen Operations

Holding pens can be used to allow fish time to imprint on release waters, acclimate to release water conditions and better prepare for predation and other migration impediments. Juveniles reared at the Conservation Facility in future reintroduction phases will not need the benefit of imprinting time in holding pens, but holding pens may be useful in controlling release conditions or locations to improve survival.

Net Pen Construction

The proposed net pen design would be a modification from Novotny (1975, cited in DSCP Attachment B) and a completely closed frame constructed of SDR 35-Polyvinyl Chloride (PVC) pipe. The frame dimensions would be 39 inches by 39 inches by 39 inches (1m by 1m by 1m) to provide a net pen volume of 1yd^3 (1m^3). The frame surface would be covered with 0.12 inch (3mm) netting. In order to provide an

amount of space for each fry similar to what they experience in aquaculture facilities (~118cm^3 per fry; A.J. Dill, personal communication), five 1m^3 net pens will need to be constructed to hold approximately 49,240 fry. However, since conditions are much more controlled in an aquaculture facility, there is a suggestion that testing of the stocking density issue be done on rainbow trout and using the results of that work to determine the number of net pens needed to provide adequate space for the reintroduction fish.

Site Selection

Selection of sites will need to be made based on environmental conditions given the water year type. Shaded sites or sites with suitable water temperatures (<15.6 C), depths (>1.5 m), and water velocities (~.2 m^3/sec) will need to be selected.

Physical Measurements

Temperature, depth, dissolved oxygen, and water velocity will be measured throughout the study. Temperature will be monitored with a Hobo brand thermograph installed inside each net pen. Thermograph measurements will be recorded at 30-minute intervals. Dissolved oxygen levels will be measured daily by deploying a YSI Pro model temperature and dissolved oxygen probe into the incubator. Surface velocity will be measured using a Marsh McBirney Flowmeter in m^3/sec.

References

Merz, J.E., J.D. Setka, G.B. Pasternack, and J.M. Wheaton. 2004. Predicting benefits of spawning-habitat rehabilitation to salmonid (Oncorhynchus spp.) fry production in a regulated California river. Canadian Journal of Fisheries and Aquatic Sciences 61:1433-1446.

Reiff County Cottages website http://www.reiffcottages.co.uk/angling/fisb0110.htm accessed March 22, 2012.

San Joaquin River Restoration Program Draft Donor Stock Collection Plan (DSCP). 2012

San Joaquin River Restoration Program Draft Donor Stock Collection Plan Attachment A Conservation Facility Subgroup 2012 Draft Donor Stock Recommendation (DSCP Attachment A). 2012

San Joaquin River Restoration Program Draft Donor Stock Collection Plan Attachment B Reintroduction Monitoring Subgroup 2012 Draft Donor Stock Recommendation (DSCP Attachment B). 2012

Stillwater Sciences. February 2003. Draft Restoration Strategies for the San Joaquin River. Appendix I Monitoring, Research, and Adaptive Management Strategies to Address Key Uncertainties

United States Fish and Wildlife Service (USFWS). February 2012, Supplemental Information as Requested by National Marine Fisheries Service for Assessing the DSCP/10(a)(1)(A) Permit Application.

United States Patent Office. May 10, 1988. Patent Number 4,742,798 Incubator and Method of Incubation and Hatching Fish Eggs and Fry. Inventor: Roger F. Blackett. Assignee: State of Alaska.